Form No.
908173
Replaces
907522

1475/1875

Variable Chamber Round Balers

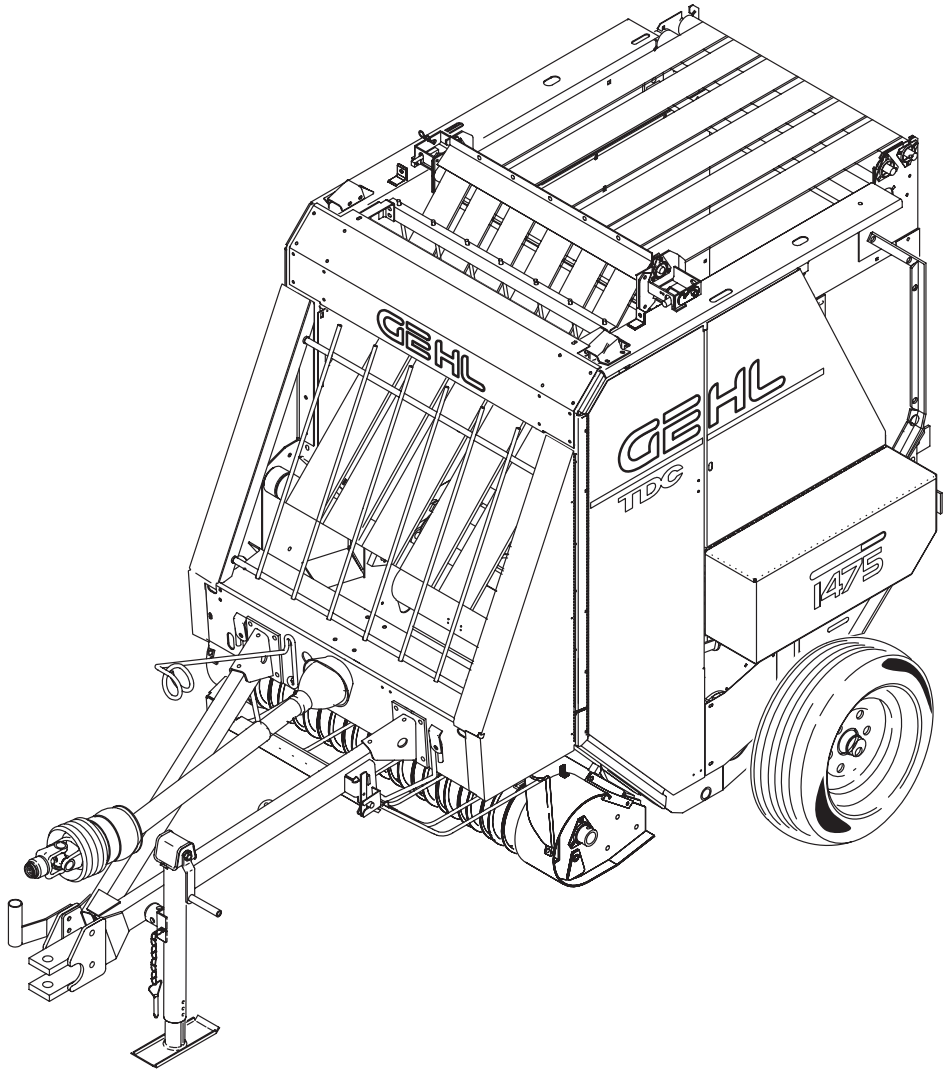

PARTS MANUAL

GEHL® AGRICULTURE

Introduction

When ordering service parts, specify the correct part number, full description, quantity required, the unit model number and serial number.

The model number and serial number for the Baler is on a decal located under the Top Channel, near the Center Column of the Right Frame Assembly. If equipped with the Quick Wrap, the Quick Wrap model and serial number is on a decal located on the Left Panel Assembly behind the Left Shield Door. “Right’’ and “Left’’ are determined from a position standing at the rear of the unit facing the direction of travel. From this position, the Baler Drive Sprocket on the Transmission Output Shaft is on the left side.

GEHL® Company reserves the right to make changes or improvements in the design or construction of any part of the unit without incurring the obligation to install such changes on any previously delivered units.

NOTE: *On original tire replacement, company policy prohibits the sale of replacement tires for all GEHL machinery. Replacement Wheel Sets are available and tire size information is called out with the Wheel Sets to facilitate replacement tire selection. ALL REPLACEMENT TIRES MUST BE PURCHASED LOCALLY.*

Refer to the abbreviations table located on this page for the various fastener descriptions. Standard attaching hardware torque values are also provided on the inside back cover.

In the exploded view parts list, Reference Numbers may have additional information following the Reference Number.

A Tear Drop symbol will indicate an application of a “wet” product such as oil, and the number inside the Tear Drop will correspond to the description in the Parts List.

Also, a number inside a hexagon will be the torque value required, in foot pounds, on the associated Reference Number. Items shown in the parts list that do not have Reference Numbers are shown for reference purposes only and are NOT available for purchase.

Unless otherwise specified, all Cap Screws or Bolts are Grade 5, cadmium plated; Hexagon Nuts for Grade 5 Screws or Bolts are Grade B; Hexagon Nuts for other Screws or Bolts are Grade A.

NOTE: *The following abbreviations may be used herein:*

A/R	– As Required
ASSD	– Assembled
ASSY	– Assembly
CB	– Carriage Bolt
CCW	– Counterclockwise
CP	– Cotter Pin
CS	– Cap Screw (Hexagon Head)
CTR	– Center
CW	– Clockwise
DEG	– Degree
DIA	– Diameter
FCS	– Flanged Cap Screw
FHMS	– Flat Head Machine Screw
FL	– Flanged
FLN	– Flanged Lock Nut (Hexagon)
FLS	– Flanged Lock Screw (Hexagon)
FW	– Flat Washer
GA	– Gauge
GR	– Grade
HD	– Hard or Head
HN	– Hex Nut
INCL	– Includes
JT	– Joint
LG	– Large
LH	– Left Hand
LW	– Lock Washer
LN	– Lock Nut
LW	– Lock Washer
M	– Metric
MM/mm	– Millimeter
NF	– National Fine
PB	– Plow Bolt
PTO	– Power Take Off
RH	– Right Hand
RHMS	– Round Head Machine Screw
RPM	– Revolutions Per Minute
RT	– Right
SERR	– Serrated
SHCS	– Socket Head Cap Screw
SHSS	– Socket Head Set Screw
SN	– Serial Number or Slotted Nut
SQ	– Square
T	– Tooth or Teeth
TFS	– Thread Forming Screw
THMS	– Truss Head Machine Screw
THRD	– Thread
WLDMT	– Weldment
#	– Number
	– Torque Required in foot pounds
	– Indicates a Fluid Application

TABLE OF CONTENTS

Introduction ..... Inside Front Cover
Table of Contents 1
Decal Locations 2-6
Drawbar & Windguard 7
Front Frame 8-9
Gearbox Drive 10-11
Frame & Crossmembers 12-15
Center Sheets 16-17
Floor Rollers 18
Scraper Roller 19
Drive Rollers 20-21
Packing Roller & Right Roll Arm 22-25
Left Roll Arm 26-27
Bale Starter 28-29
Upper Rollers 30-31
Idlers, Sprockets & Chains 32-35
TDC Hydraulics 36-39
Shuttle Assembly 40-41
Tailgate 42-43
Tailgate Hydraulics 44-47
Pickup 48-57
- Reel 48-49
- Frame, Guides & Idler 50-51
- Right Header 52
- Left Header 53
- Lift 54-55
- Overfill Clutch 56-57

Twine Boxes 58-61
Shields & Guards 62-65
Transport Lights 66-67
Twine Wrap 68-69
Automatic Bale Control 70-78
Automatic Twine Wrap Control 79-81
Manual Twine Wrap Control 82-83
Control Boxes 84-85
Actuator 87
Axle Assembly 86
Transmissions 88-89
Universal Drive 90
TDC Cylinder 91
Overrunning Clutch 92
Hitchjack 93
Options & Accessories 95-99
- Bale Ramps & Shuttle Return Kit 94
- Pickup Lift Kit 95
- Crowder Wheel Kit 96
- Safety Tow Chain, Packing Roll Lagging Kit & Lacing Kit 97
- Chain Oiler 98
- Audible Alarm Kit, Idler Assembly, Jumper Harness 99

QW1400/1800 - Rollers & Brackets 100-101
QW1400/1800 - Right Side Assembly 102-103
QW1400/1800 - Left Side Assembly 104-105
QW1400/1800 - Shields, Control Box & Harness 106-110
Service Kits – Electrical Connectors 111
Alphabetical Index 112
Numerical Index 113-124
Standard Hardware Torque specifications ..... Inside Back Cover

DECAL LOCATIONS

GENERAL INFORMATION

Decal locations information is provided to assist in the proper selection and application of new decals, in the event the original decal(s) become(s) damaged or the machine is repainted. Refer to the listing for the photograph or illustration reference number, part number, description and quantity of each decal provided in the kit. Refer to the appropriate photograph(s) or illustration(s) for replacement location(s).

NOTE: *Refer to the SAFETY Chapter of the Operator's Manual for the specific information provided on all of the various safety decals furnished in the decal kit(s).*

To insure proper selection for correct replacement decal(s), compare all of the various close-up location photographs and illustrations to your machine BEFORE starting to refinish the unit. Then, circle each pictured decal (applicable to your machine) while checking off its part number in the listing. After you have verified all the decals needed for replacement, set aside unneeded decals for disposal.

NEW DECAL APPLICATION

Surfaces MUST be free from dirt, dust, grease and other foreign material before applying the new decal. To apply a solid-formed decal, remove the smaller portion of the decal backing paper and apply this part of the exposed adhesive backing to the clean surface while maintaining proper position and alignment. Slowly peel off the other portion of the backing paper while applying hand pressure to smooth out the decal surface.

CAUTION

ALWAYS observe safety precautions shown on decals. If decals become damaged, or if the unit is repainted, replace the decals. If repainting, BE SURE that ALL decals from the kit(s) that apply to your machine are affixed to your unit.

PAINT NOTICE

Use this list to order paint for refinishing:

906315	**One Gal. AG Red**
902872	**One Qt. Light Grey**
906316	**6 (12 oz. Spray Cans) AG Red**
902874	**6 (12 oz. Spray Cans) Light Grey**

For a complete decal set, order Part Number 119614 for the RB1475 model Baler or 119615 for the RB1875 model Baler. The following decals (as required) are included in the sets:

Ref. No.	Part No.	Description & Quantity
1	060147	Operating Instructions
2	060148	General Operating Instructions
3	060151	Shuttle Lock Position (2 Places)
4	060510	Jack Storage Position
5	060511	Jack Lifting Position
6	061832	Belt Tracking Adjustment (2 Places)
7	067131	Patent
8	145216	Red Reflector Strip (2 Places) (After SN26150-1475 & 18800-1875)
	067493	Red Reflector Strip (2 Places) (Before SN26151-1475 & 18801-1875)
9	091444	DANGER - Rotating Drive Line
10	093020	Lubrication Symbol (16 Places)
11	093366	IMPORTANT - Store Manual Here
12	093367	WARNING - Owner's Responsibility & Read Manual
13	093373	WARNING - General Safety
14	093457	WARNING - Keep Door Closed (3 Places)
15	093458	WARNING - Rotating Wrench
16	093459	WARNING - Reservoir Contamination
17	093461	DANGER - Belt Entanglement
18	093462	DANGER - No Manual Feed (2 Places)
19	093466	WARNING - 540 RPM Operation ONLY
20	093653	WARNING - Rotating Drive Line
21	094914	GEHL 5 x 23-1/2″ (Front)
22	094962	Colorbar 13-1/2 (1 on Each Side)
23	119562**	Bale Size Indicator (1875 – 0-3)
	119561**	Bale Size Indicator (1875 – 4-6)
	094977**	Bale Size Indicator (1475)*
24	112981	Oil Level Indicator
25	113340	Reservoir Maintenance
26	119446	1475
	119447	1875*
27	119448	TDC (1 on Each Side)
28	119449	High Moisture (Left Side)(1475 only)
	119450	High Moisture (Right Side)(1475 only)*
29	141493	Tailgate Lock (After SN25000-1475 & 17900-1875)
	119553	Tailgate Lock (Before SN25001-1475 & 17901-1875)
30	119554	DANGER - Moving Tailgate (2 Places)
31	119596	DANGER - Baler Entanglement (2 Places)
32	120484	Twine Routing (1 on Each Side)
33	122617	GEHL (1 on Each Side)
34	153357	Reversing Wrench (After SN26150-1475 & 18800-1875)
35	143007†	DANGER - Shield Missing

* Not Shown

** Manual Wrap Control Models Only

† Not included in Decal Kit

NOTE: *Order Part Number 126757 for 10 ft roll of replacement Striping*

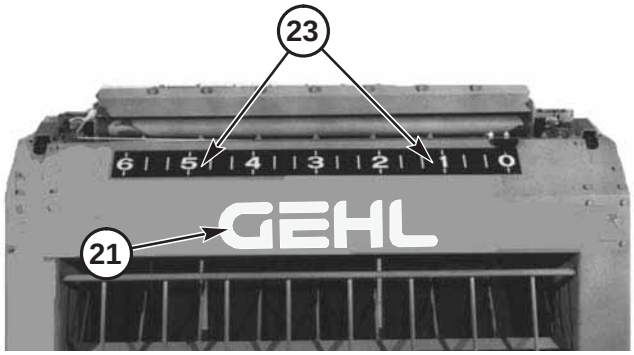

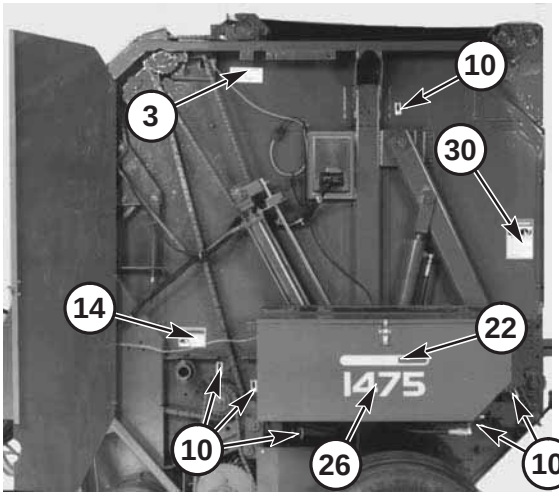

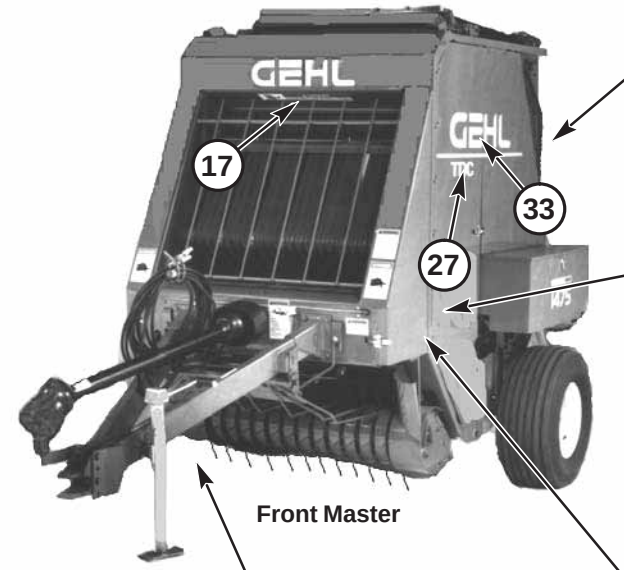

Front Master

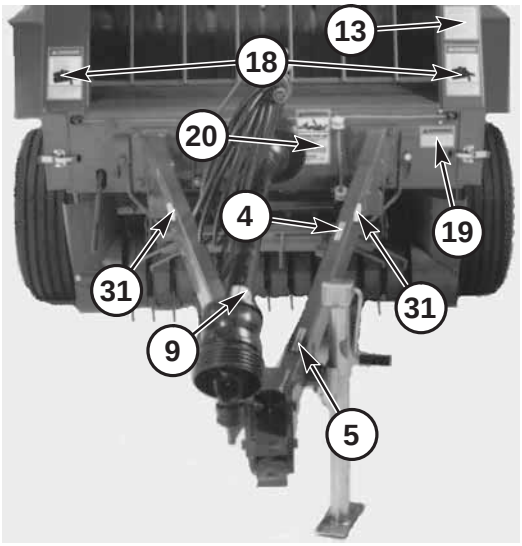

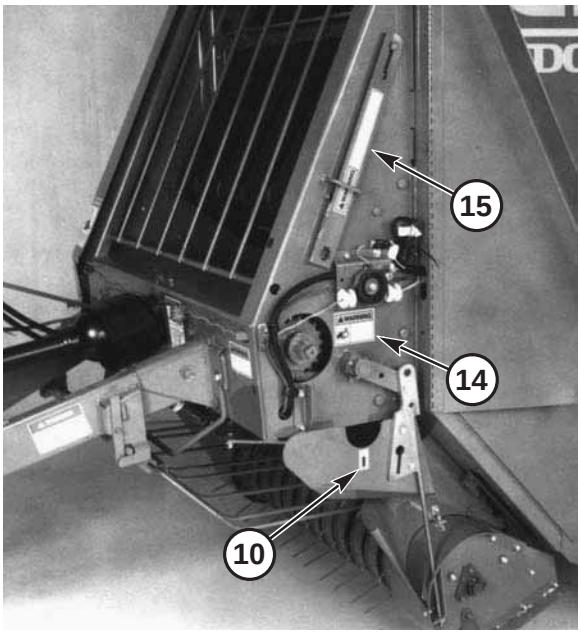

NOTE: *This following is a duplicated listing of the Decals from a previous page. It is provided for your convenience when selecting Decals from the second page of photographs.*

For a complete Decal Set, order Part Number 119614 for the RB1475 model Baler or 119615 for the RB1875 model Baler. The following Decals (as required) are included in the Sets:

Ref. No.	Part No.	Description & Quantity
1	060147	Operating Instructions
2	060148	General Operating Instructions
3	060151	Shuttle Lock Position (2 Places)
4	060510	Jack Storage Position
5	060511	Jack Lifting Position
6	061832	Belt Tracking Adjustment (2 Places)
7	067131	Patent
8	145216	Red Reflector Strip (2 Places) (After SN26150-1475 & 18800-1875)
	067493	Red Reflector Strip (2 Places) (Before SN26151-1475 & 18801-1875)
9	091444	DANGER - Rotating Drive Line
10	093020	Lubrication Symbol (16 Places)
11	093366	IMPORTANT - Store Manual Here
12	093367	WARNING - Owner's Responsibility & Read Manual
13	093373	WARNING - General Safety
14	093457	WARNING - Keep Door Closed (3 Places)
15	093458	WARNING - Rotating Wrench
16	093459	WARNING - Reservoir Contamination
17	093461	DANGER - Belt Entanglement
18	093462	DANGER - No Manual Feed (2 Places)
19	093466	WARNING - 540 RPM Operation ONLY
20	093653	WARNING - Rotating Drive Line
21	094914	GEHL 5 x 23-1/2″ (Front)
22	094962	Colorbar 13-1/2 (1 on Each Side)
23	119562**	Bale Size Indicator (1875 – 0-3)
	119561**	Bale Size Indicator (1875 – 4-6)
	094977**	Bale Size Indicator (1475)*
24	112981	Oil Level Indicator
25	113340	Reservoir Maintenance
26	119446	1475
	119447	1875*
27	119448	TDC (1 on Each Side)
28	119449	High Moisture (Left Side)(1475 only)
	119450	High Moisture (Right Side)(1475 only)*
29	141493	Tailgate Lock (After SN25000-1475 & 17900-1875)
	119553	Tailgate Lock (Before SN25001-1475 & 17901-1875)
30	119554	DANGER - Moving Tailgate (2 Places)
31	119596	DANGER - Baler Entanglement (2 Places)
32	120484	Twine Routing (1 on Each Side)
33	122617	GEHL (1 on Each Side)
34	153357	Reversing Wrench (After SN26150-1475 & 18800-1875)
35	143007†	DANGER - Shield Missing

* Not Shown

** Manual Wrap Control Models Only

† Not included in Decal Kit

NOTE: *Order Part Number 126757 for 10 ft roll of replacement Striping*

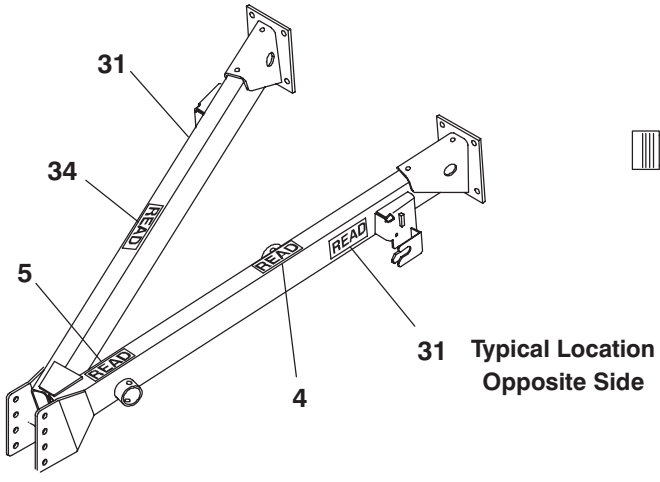

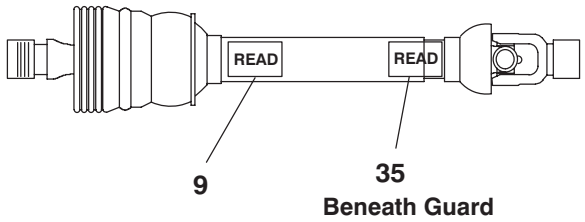

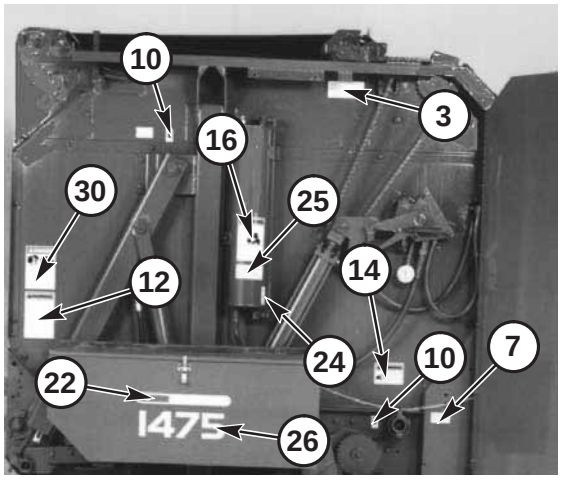
10
3
16
30
25
14
12
24
10
7
22
1475
26

Rear Master

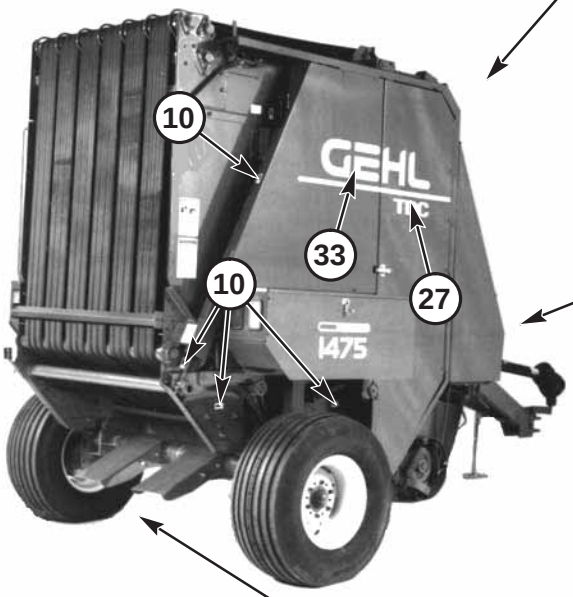
10
GEHL
33
27
10
1475

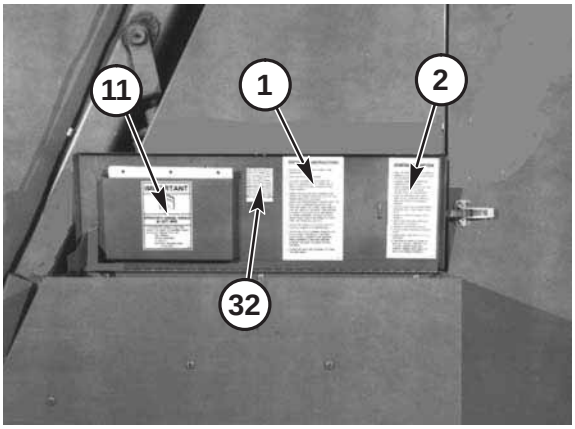
11
1
2
32

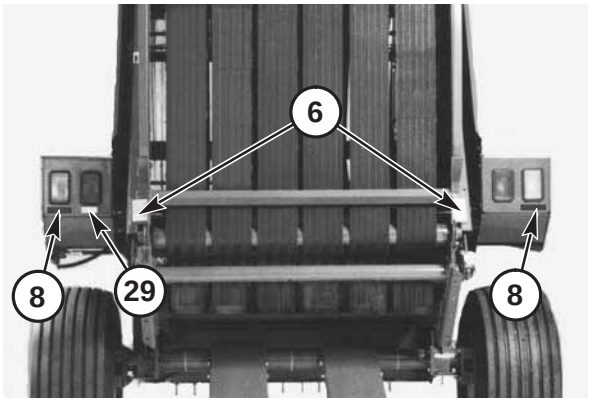
6
8
29
8

QUICK WRAP DECALS

Individual Decal Sets for the QW1400 and QW1800 Quick Wraps are NOT available. Order Quick Wrap decals by individual part numbers.

Ref. No.	Part No.	Description & Quantity
1.	047272	Decal – SMV
2.	093457	WARNING – Moving Components (2 Places)
3.	124982	WARNING – Pinch Point
4.	113151	Decal – Net Instructions

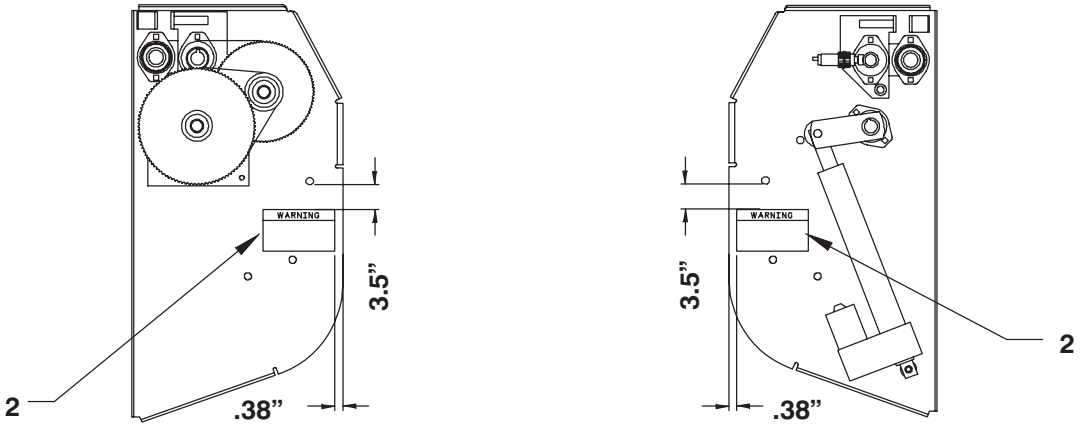

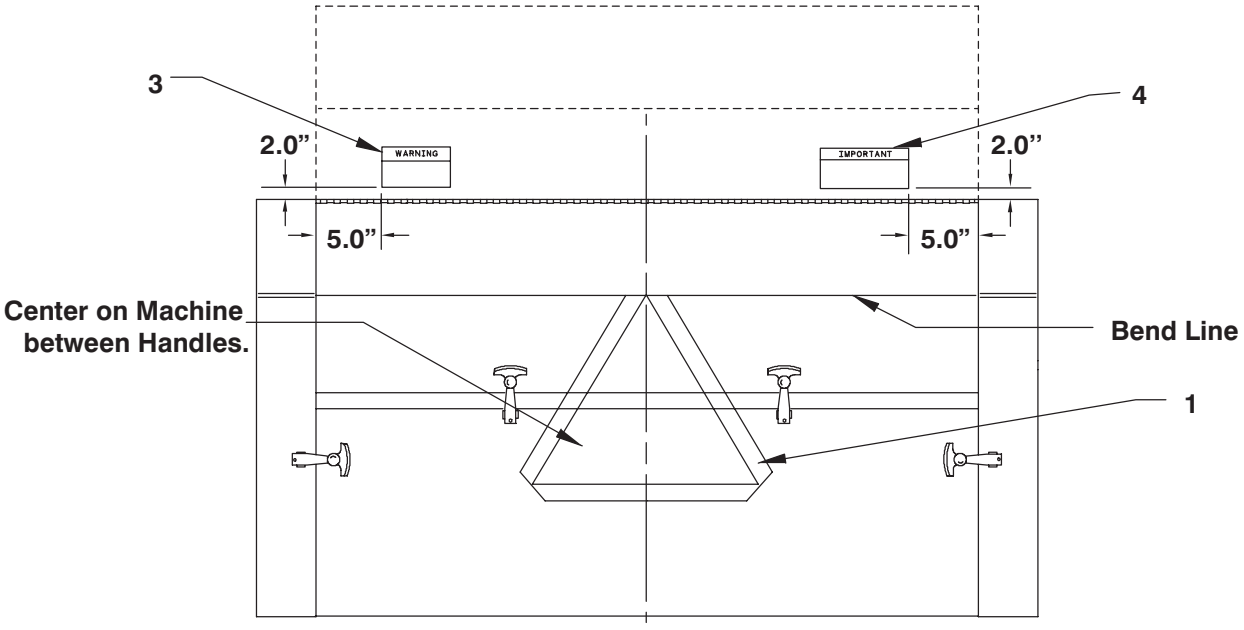

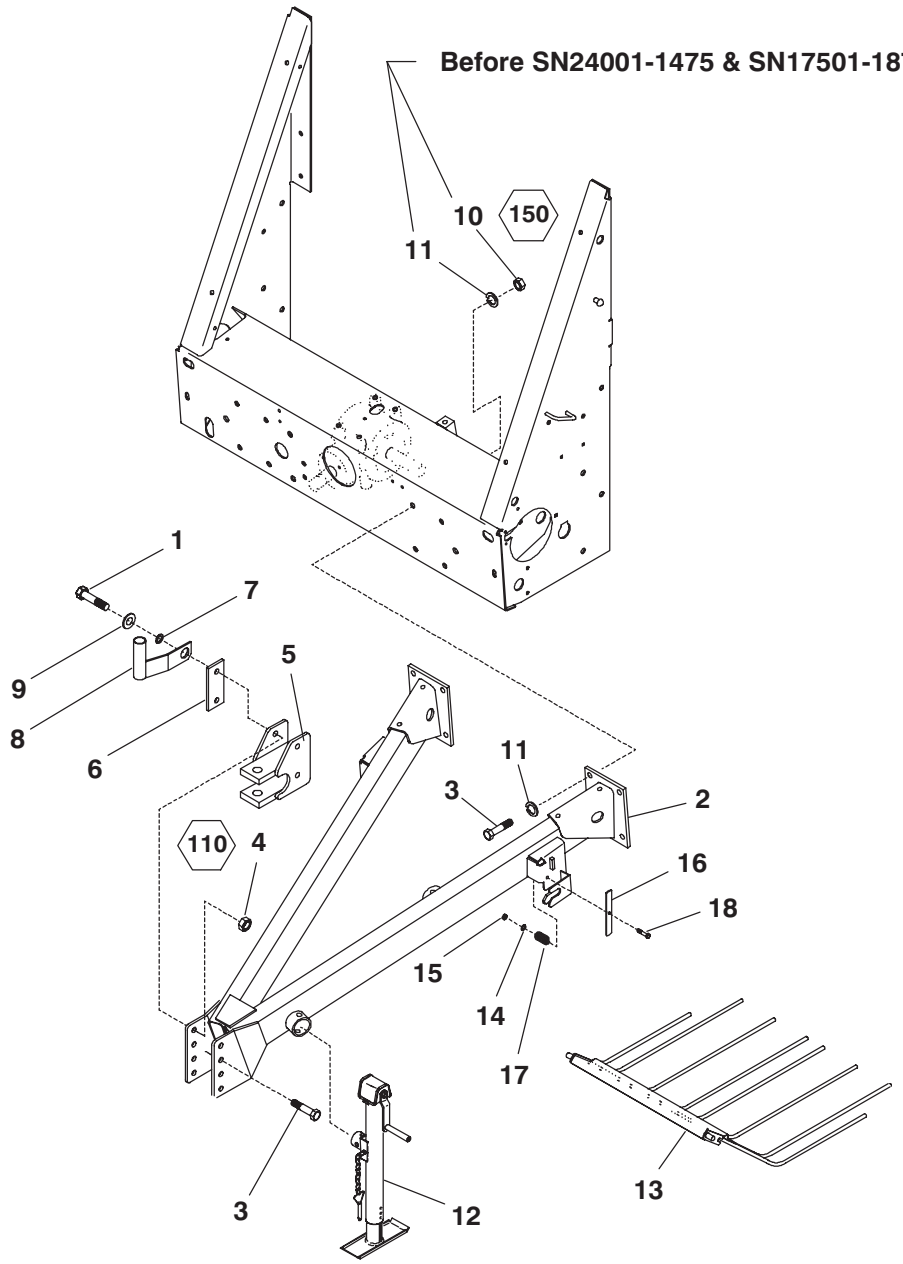

Ref. No.	Part No.	Description	Qty. Req.
01	650710	CS 5/8X2-1/4	1
02	119595[a]	DRAWBAR ASSY	1
03	650844	CS 5/8X1-3/4	11
04	210-19531	FLN 5/8	4
05	098503	ASSY/HITCH	1
06	098996	MOUNT/PLATE ASSY	1
07	098997	BUSHING/PIVOT	1
08	098993	MOUNT/ROD ASSY	1
09	654012	FW 5/8	1
10	653021	HN 5/8	8
		(BEFORE SN24001-1475 & 17501-1875)	
11	654032	LW 5/8	8
12	143470[b]	JACK (FULTON)	1
	088841[b]	JACK (WESBAR)	1
13	119153	WINDGUARD (1475)	1
	119154	WINDGUARD (1875)	1
14	654004	FW 5/16	2
15	071701	LN 5/16	2
16	119027	LEVER	2
17	A162	SPRING/ROLLER GUARD	2
18	650725	CS 5/16X2-1/4	2

a) Includes Decal 119596.

b) For component breakdown see page entitled Hitchjack.

RB1475/1875 - FRONT FRAME

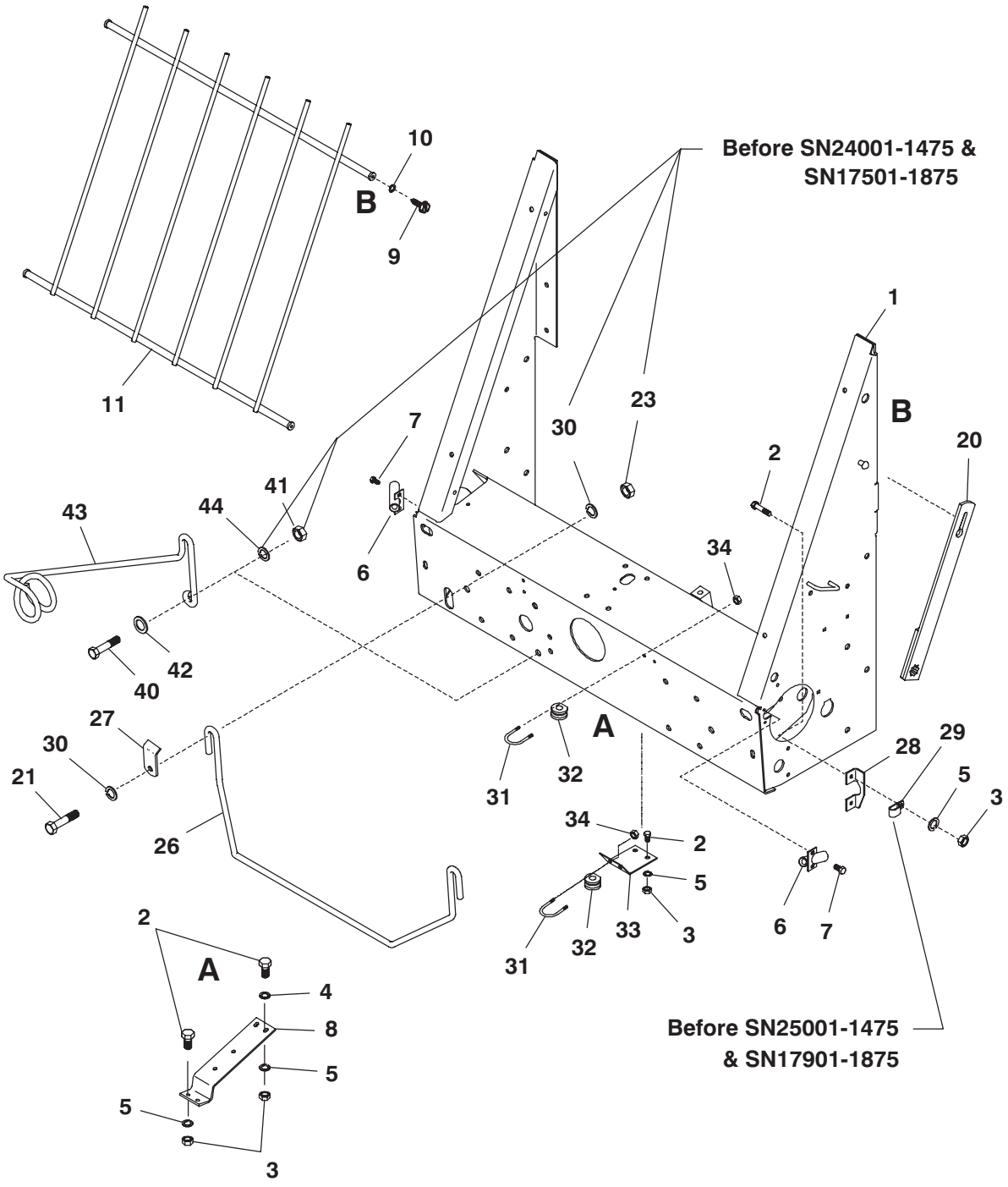

Ref. No.	Part No.	Description	Qty. Req.
01	156988[a]	HITCH/ASSY (AFTER SN26150-1475)	1
	142009[a]	HITCH/ASSY (AFTER SN25000 & BEFORE 26151-1475)	1
	119441[a]	HITCH/ASSY (BEFORE SN25001-1475)	1
	156575[a]	HITCH/ASSY (AFTER SN18800-1875)	1
	142010[a]	HITCH/ASSY (AFTER SN17900 & BEFORE 18801-1875)	1
	119549[a]	HITCH/ASSY (BEFORE SN17901-1875)	1
02	650490	CS 3/8X1	10
03	653010	HN 3/8	10
04	654006	FW 3/8	2
05	654026	LW 3/8	10
06	119336	TWINE TUBE/ASSY	2
07	650985	TFS 5/16X3/4	4
08	119215	BRACE	1
09	650987	TFS 3/8X1-1/2	4
10	654004	FW 5/16	4
11	119136	GUARD/ASSY (1475)	1
	119277	GUARD/ASSY (1875)	1
20	072478	HANDLE/REVERSING ASSY	1
21	650647	CS 5/8X2	2
23	653021	HN 5/8 (BEFORE SN24001-1475 & 17501-1875)	2
26	119173	STOP/UP	1
27	119174	CLAMP/STOP	2
28	141462	RAMP (AFTER SN25000-1475 & 17900-1875)	2
	119597	RAMP (BEFORE SN25001-1475 & 17901-1875)	2
29	097860	CLAMP/HOSE DOUBLE (BEFORE SN25001-1475 & 17901-1875)	1
30	654032	LW 5/8	2
31	B11069	U BOLT/ECCENTRIC SHAFT	3
32	059721	GUIDE/ROPE	3
33	119279	BRACKET/INSULATOR	1
34	064260	NILN 5/16	6
40	650569	CS 1/2X1-3/4	2
41	653018	HN 1/2	2
42	654009	FW 1/2	2
43	118620	HOLDER/HOSE	1
44	654030	LW 1/2	2

a) Includes Decals 093457, 093466 and 093653.

RB1475/1875 - DRIVE, GEARBOX

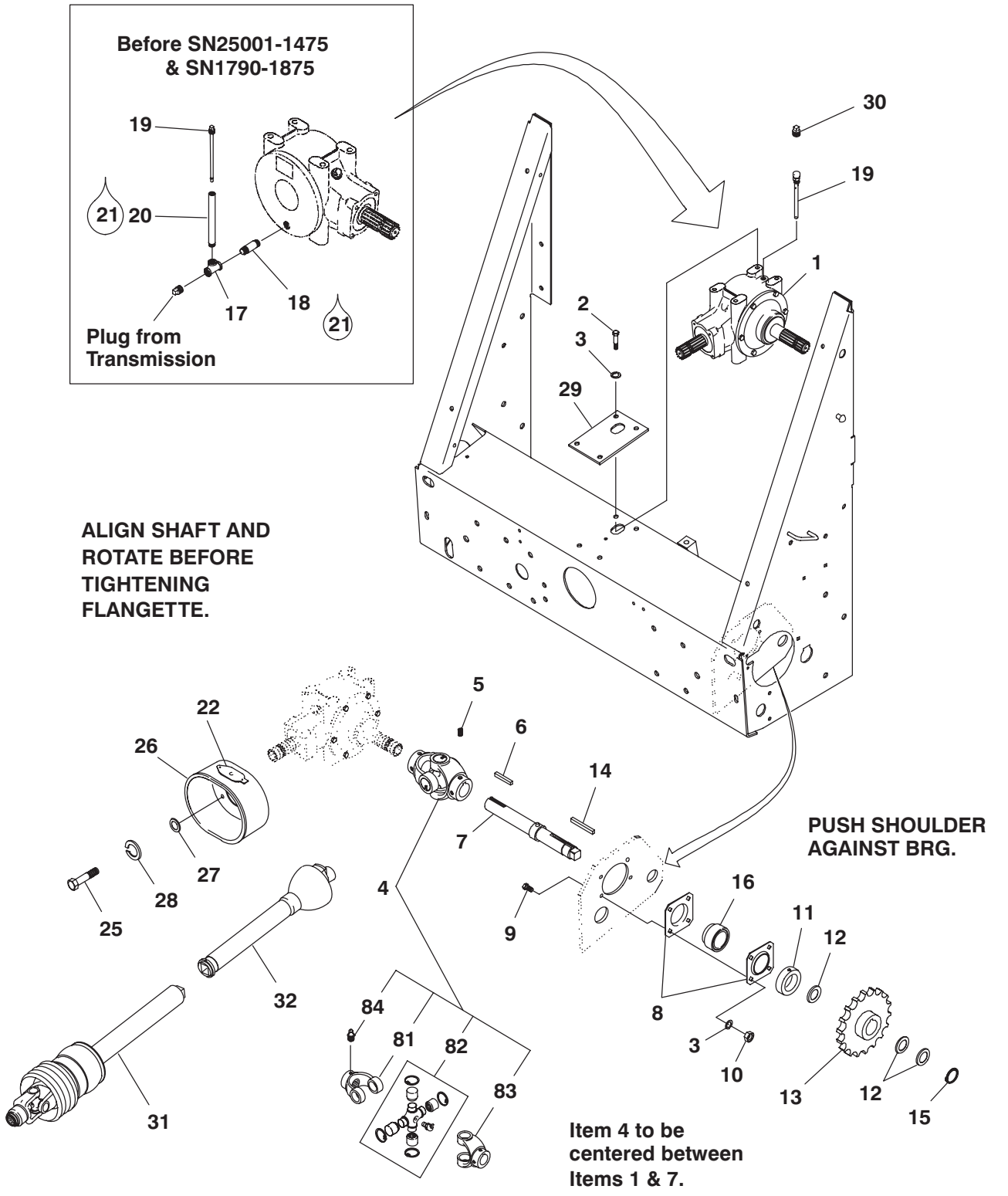

Ref. No.	Part No.	Description	Qty. Req.
01	141549[a]	TRANS/ASSMD 540 RPM (AFTER SN25000-1475 & 17900-1875)	1
	094804[a]	TRANS/ASSMD 540 RPM (BEFORE SN25001-1475 & 17901-1875)	1
	141550[b]	TRANS/ASSMD 1000 RPM (AFTER SN25000-1475 & 17900-1875)	1
	126829[b]	TRANS/ASSMD 1000 RPM (BEFORE SN25001-1475 & 17901-1875)	1
02	650495	CS 1/2X1-1/4	4
03	654030	LW 1/2	8
04	119164	35 UNIVERSAL JOINT ASSY	1
05	650215	SHSS 3/8X1/2	2
06	056230	KEY/SQUARE	1
07	145819	SHAFT/ASSY (AFTER SN26150-1475)	1
	119168	SHAFT/ASSY (BEFORE SN26151-1475)	1
	145820	SHAFT/ASSY (AFTER SN18800-1875)	1
	119169	SHAFT/ASSY (BEFORE SN18801-1875)	1
08	077601	RETAINER/BEARING	2
09	650495	CS 1/2X1-1/4	4
10	653018	HN 1/2	4
11	520099	COLLAR/BEARING	1
12	400-32417	WASHER, SPECIAL	AR
13	119163	SPROCKET/80B18T	1
14	006989	KEY/SQUARE	1
15	065240	RING/RETAINING	1
16	089831	BEARING/BALL	1
17	660061	TEE/PIPE 3/8 (BEFORE SN25001-1475 & 17901-1875)	1
18	660062	NIPPLE/CLOSE 3/8 (BEFORE SN25001-1475 & 17901-1875)	1
19	141645	DIPSTICK/BREATHER (AFTER SN25000-1475 & 17900-1875)	1
	119637	PIPE/PLUG W/DIPSTICK (BEFORE SN25001-1475 & 17901-1875)	1
20	119640	STAND/DIP STICK (AFTER SN25000-1475 & 17900-1875)	1
21		SEALANT/WICKING	
22	126342	FLAP	1
25	656001	CS M8-1.25X20	4
26	118511	SHIELD/DRIVELINE	1
27	654004	FW 5/16	4
28	654024	LW 5/16	4
29	153344	PLATE (AFTER SN26150-1475 & 18800-1875)	1
	062255	FW 17/32 (BEFORE SN26151-1475 & 18801-1875)	4
30	097208	PLUG/GAS 3/8	1
31	084404[c]	JOINT/SHAFT (540RPM)	1
32	119373[c]	JOINT/TUBE (540RPM)	1
81	119165	YOKE	1
82	045327	KIT/CENTER CROSS	1
83	119166	YOKE	1
84	570019	FITTING/GREASE	1

a) For further breakdown, see page entitled 'Transmission (540 RPM)'.

b) For further breakdown, see page entitled 'Transmission (1000 RPM)'.

c) For further breakdown, see page entitled 'Universal Drive'.

RB1475/1875 - FRAME & CROSSMEMBERS (AFTER SN25000-1475 & SN17900-1875)

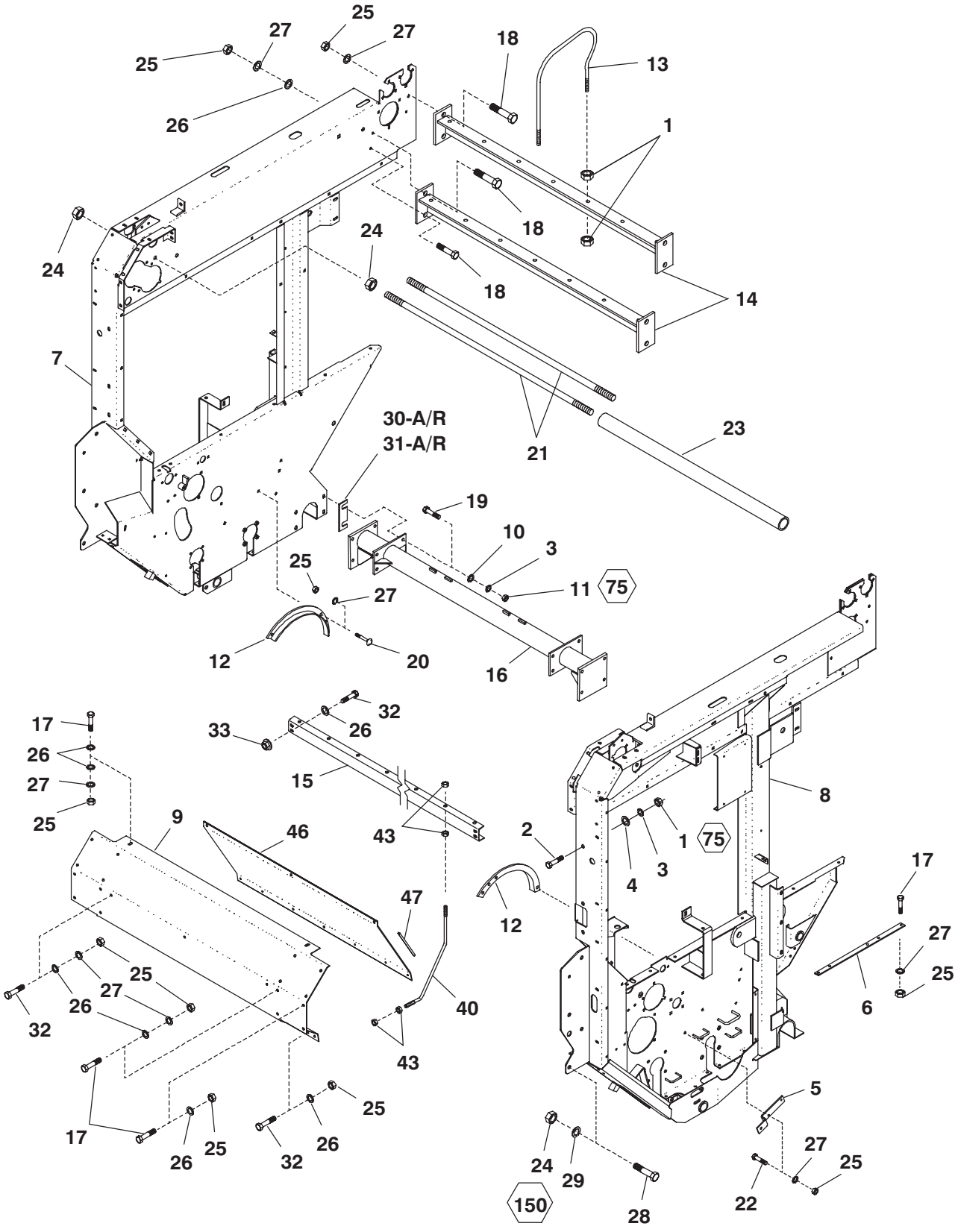

RB1475/1875 - FRAME & CROSSMEMBERS (AFTER SN25000-1475 & SN17900-1875)

Ref. No.	Part No.	Description	Qty. Req.
01	653018	HN 1/2 (1475)	34
		HN 1/2 (1875)	42
02	650495	CS 1/2X1-1/4	6
03	654030	LW 1/2	14
04	654009	FW 1/2	6
05	119318	MOUNT/IDLER ARM	1
06	119064	SUPPORT (1475)	2
		SUPPORT (1875)	2
07	141517	FRAME/RT ASSY (1475)	1
	118181	FRAME/RT ASSY (1875)	1
08	141518	FRAME/LT ASSY (1475)	1
	118182	FRAME/LT ASSY (1875)	1
09	141524[a]	PANEL/FRONT TOP (1475)	1
	141523[a]	PANEL/FRONT TOP (1875)	1
10	071520	FW 17/32	8
11	081374	FLN 1/2	8
12	075502	SHIELD/ROLL 16″	2
13	078128	ROD/GUIDE REAR (1475)	7
		ROD/GUIDE REAR (1875)	9
14	084608	GUIDE/BELT ASSY (1475)	2
	084687	GUIDE/BELT ASSY (1875)	1
15	119003	GUIDE/BELT TOP FRONT (1475)	1
	119004	GUIDE/BELT TOP FRONT (1875)	1
16	119451	AXLE/SHIELD ASSY (1475)	1
	119452	AXLE/SHIELD ASSY (1875)	1
17	650490	CS 3/8X1	32
18	650491	CS 3/8X1-1/4	8
19	650569	CS 1/2X1-3/4	8
20	650704	CB 3/8X1	13
21	066155	ROD/REWRAP (1475)	2
	061711	ROD/REWRAP (1875)	2
22	650786	CB 3/8X1-1/4	2
23	092303	SHIELD/SHAFT (1475)	1
	099625	SHIELD/SHAFT (1875)	1
24	653021	HN 5/8	16
25	653010	HN 3/8	44
26	654006	FW 3/8	18
27	654026	LW 3/8	42
28	650610	CS 5/8X1-1/4	8
29	654032	LW 5/8	8
30	119367	SHIM (1875 Only)	2
31	119375	SHIM (1875 Only)	2
32	650488	CS 3/8X3/4	4
33	070856	FLN 3/8	4
40	120868	ROD/GUIDE FRONT (1475)	7
		ROD/GUIDE FRONT (1875)	9
43	653018	HN 1/2 (1475)	28
		HN 1/2 (1875)	36
46	120869	PANEL/FRONT INNER (1475)	1
	120871	PANEL/FRONT INNER (1875)	1
47	084255	TRIM/GUARD	1

a) Includes Decal 093461.

RB1475/1875 - FRAME & CROSSMEMBERS (BEFORE SN25001-1475 & SN17901-1875)

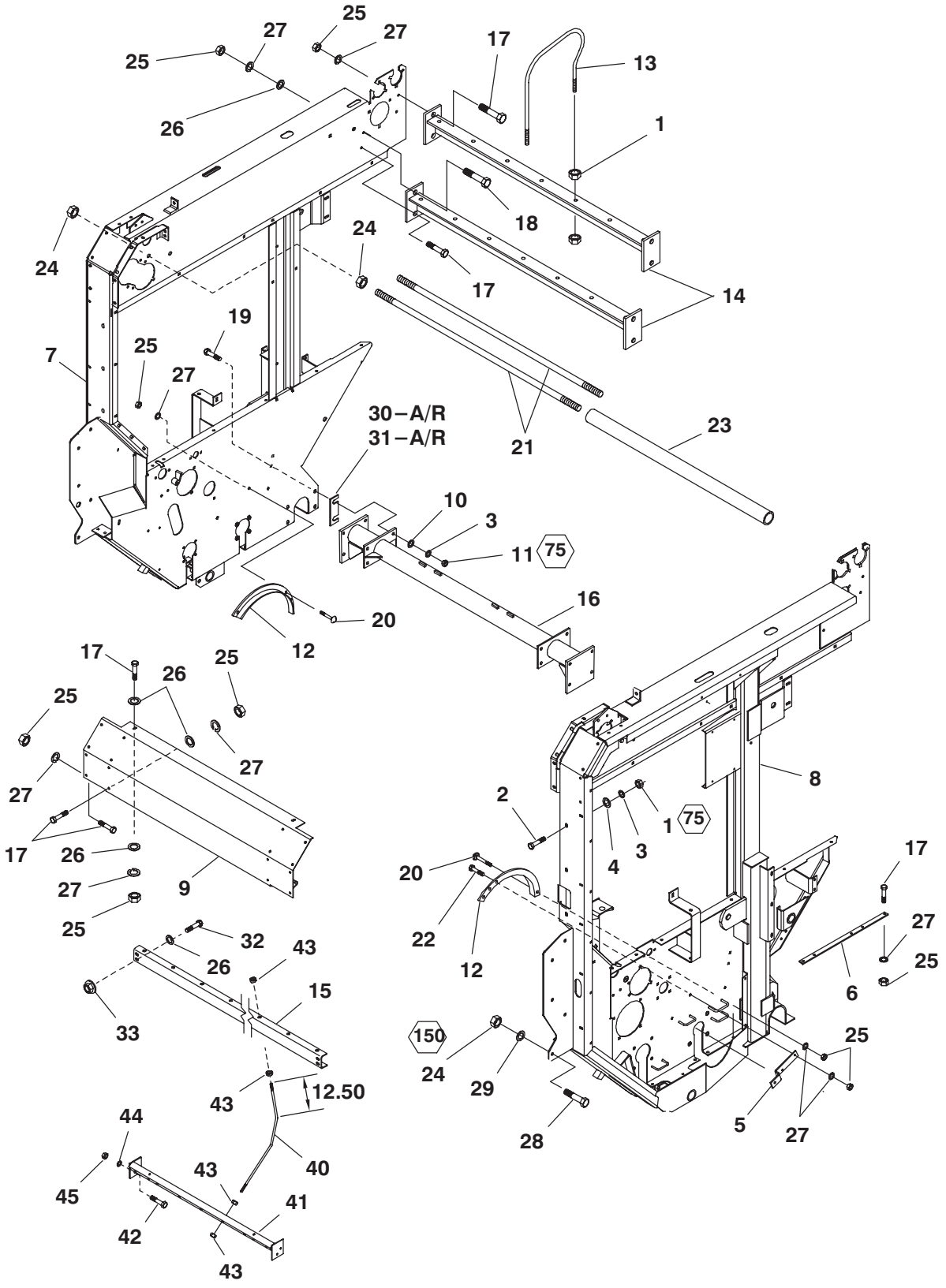

RB1475/1875 - FRAME & CROSSMEMBERS (BEFORE SN25001-1475 & SN17901-1875)

Ref. No.	Part No.	Description	Qty. Req.
01	653018	HN 1/2 (1475)	34
		HN 1/2 (1875)	42
02	650495	CS 1/2X1-1/4	6
03	654030	LW 1/2	14
04	654009	FW 1/2	6
05	119318	MOUNT/IDLER ARM	1
06	119064	SUPPORT (1475)	2
		SUPPORT (1875)	2
07	118330	FRAME/RT ASSY (1475)	1
	118181	FRAME/RT ASSY (1875)	1
08	118331	FRAME/LT ASSY (1475)	1
	118182	FRAME/LT ASSY (1875)	1
09	119438[a]	PANEL/FRONT TOP (1475)	1
	119552[a]	PANEL/FRONT TOP (1875)	1
10	071520	FW 17/32	8
11	081374	FLN 1/2	8
12	075502	SHIELD/ROLL 16″	2
13	078128	ROD/GUIDE REAR (1475)	7
		ROD/GUIDE REAR (1875)	9
14	084608	GUIDE/BELT ASSY (1475)	2
	084687	GUIDE/BELT ASSY (1875)	1
15	119003	GUIDE/BELT TOP FRONT (1475)	1
	119004	GUIDE/BELT TOP FRONT (1875)	1
16	119451	AXLE/SHIELD ASSY (1475)	1
	119452	AXLE/SHIELD ASSY (1875)	1
17	650490	CS 3/8X1	34
18	650491	CS 3/8X1-1/4	2
19	650569	CS 1/2X1-3/4	8
20	650704	CB 3/8X1	13
21	066155	ROD/REWRAP (1475)	2
	061711	ROD/REWRAP (1875)	2
22	650786	CB 3/8X1-1/4	2
23	092303	SHIELD/SHAFT (1475)	1
	099625	SHIELD/SHAFT (1875)	1
24	653021	HN 5/8	16
25	653010	HN 3/8	44
26	654006	FW 3/8	18
27	654026	LW 3/8	42
28	650610	CS 5/8X1-1/4	8
29	654032	LW 5/8	8
30	119367	SHIM (1875 Only)	2
31	119375	SHIM (1875 Only)	2
32	650488	CS 3/8X3/4	4
33	070856	FLN 3/8	4
40	078301	ROD/GUIDE FRONT (1475)	7
		ROD/GUIDE FRONT (1875)	9
41	118553	SUPPORT/FRONT ASSY (1475)	1
	118646	SUPPORT/FRONT ASSY (1875)	1
42	650490	CS 3/8X1	4
43	653018	HN 1/2 (1475)	28
		HN 1/2 (1875)	36
44	654026	LW 3/8 (1475)	4
		LW 3/8 (1875)	4
45	653010	HN 3/8 (1475)	4
		HN 3/8 (1875)	4

a) Includes Decal 093461.

RB1475/1875 - CENTER SHEETS

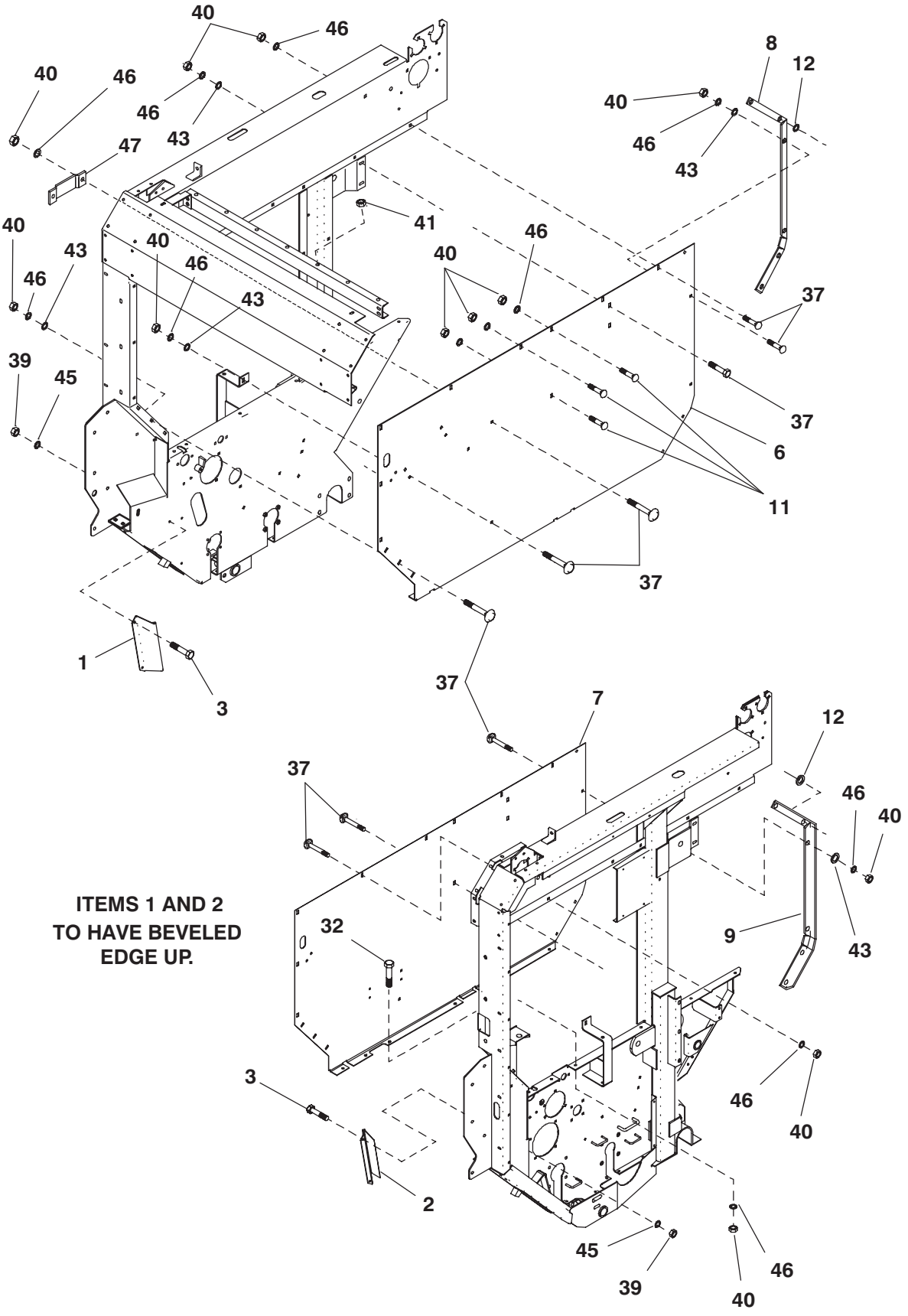

Ref. No.	Part No.	Description	Qty. Req.
01	075500	DEFLECTOR/CROP RT	1
02	075501	DEFLECTOR/CROP LT	1
03	650486	CS 5/16X3/4	4
06	119443[a]	SHEET/CENTER RT (1475)	1
	119551[a]	SHEET/CENTER RT (1875)	1
07	119442[b]	SHEET/CENTER LT (1475)	1
	119550[b]	SHEET/CENTER LT (1875)	1
08	075497	ANGLE/GATE GUIDE RT (1475)	1
	075622	ANGLE/GATE GUIDE RT (1875)	1
09	075498	ANGLE/GATE GUIDE LT (1475)	1
	075626	ANGLE/GATE GUIDE LT (1875)	1
11	650773	CB 3/8X1-1/2	3
12	048459	FW 17/32	2
32	650490	CS 3/8X1	12
37	650704	CB 3/8X1 (1475)	39
		CB 3/8X1 (1875)	43
39	653007	HN 5/16	4
40	653010	HN 3/8 (1475)	54
		HN 3/8 (1875)	54
43	654006	FW 3/8	22
45	654024	LW 5/16	4
46	654026	LW 3/8 (1475)	54
		LW 3/8 (1875)	54
47	074792	STRAP/CYLINDER	1

a) Includes Decals 093367, 093457, 093460 and 119554.

b) Includes Decals 093457, 093460 and 119554.

RB1475/1875 - FLOOR ROLLERS

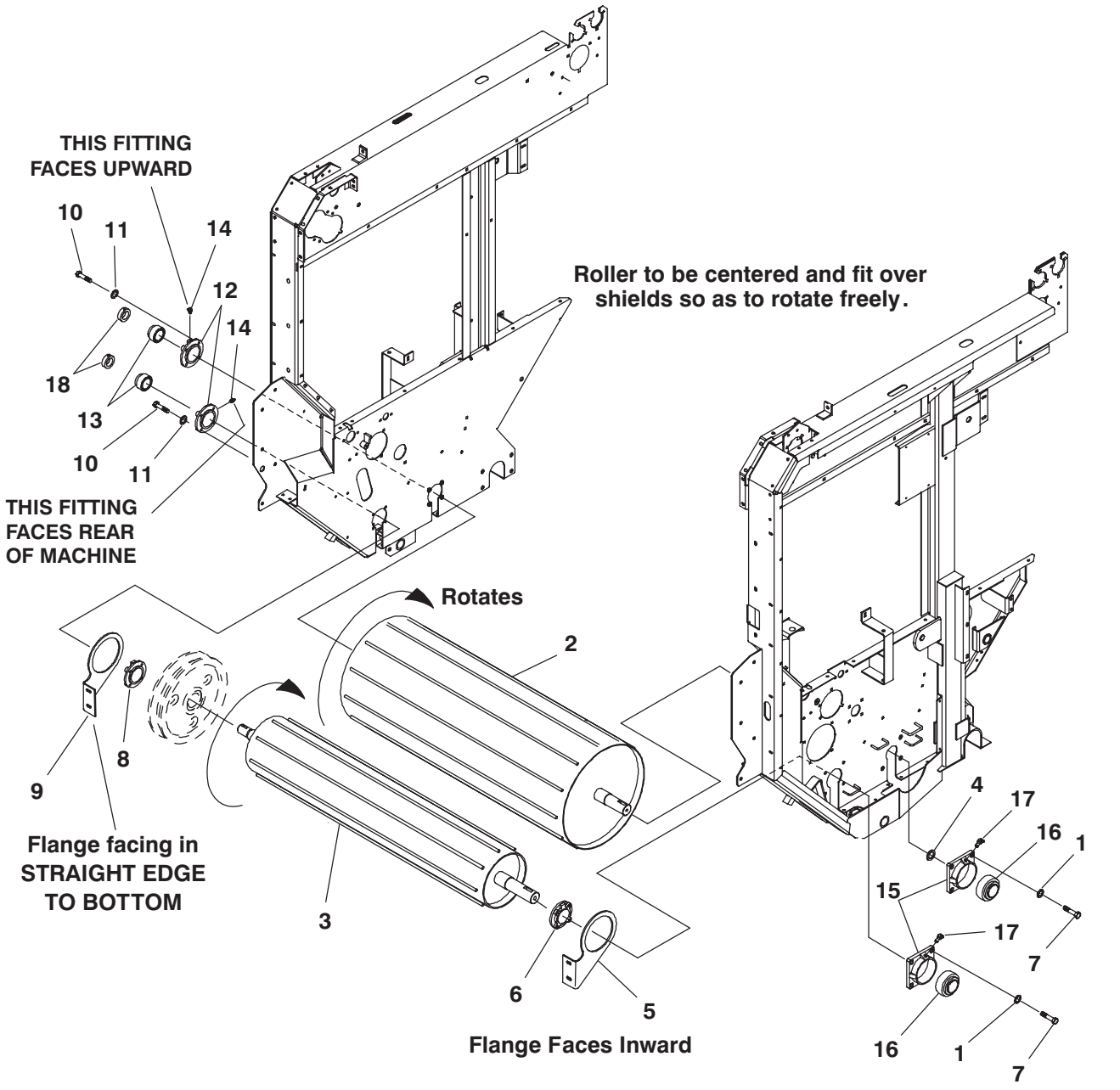

Ref. No.	Part No.	Description	Qty. Req.	Ref. No.	Part No.	Description	Qty. Req.
01	654030	LW 1/2	8	09	090057	ARM/PIVOT RT	1
02	118312	ROLLER/16.00 ASSY (1475)	1	10	650579	CS 3/8X1-1/4	8
	118327	ROLLER/16.00 ASSY (1875)	1	11	654026	LW 3/8	8
03	118263	ROLLER/8.00 DIA. ASSY (1475)	1	12	061809	HOUSING/BEARING	2
	118325	ROLLER/8.00 DIA. ASSY (1875)	1	13	041499	BEARING/BALL	2
04	042158	FW 1-21/32 SPECIAL	1	14	570003	FITTING/GREASE	2
05	090060	ARM/PIVOT LT	1	15	R13216	HOUSING/BEARING	2
06	090065	PLATE/END LT ASSY	1	16	520098	BEARING/BALL	2
07	650569	CS 1/2X1-3/4	8	17	570023	FITTING/GREASE	2
08	090061	PLATE/END RT ASSY	1	18	520093	COLLAR/BEARING	2

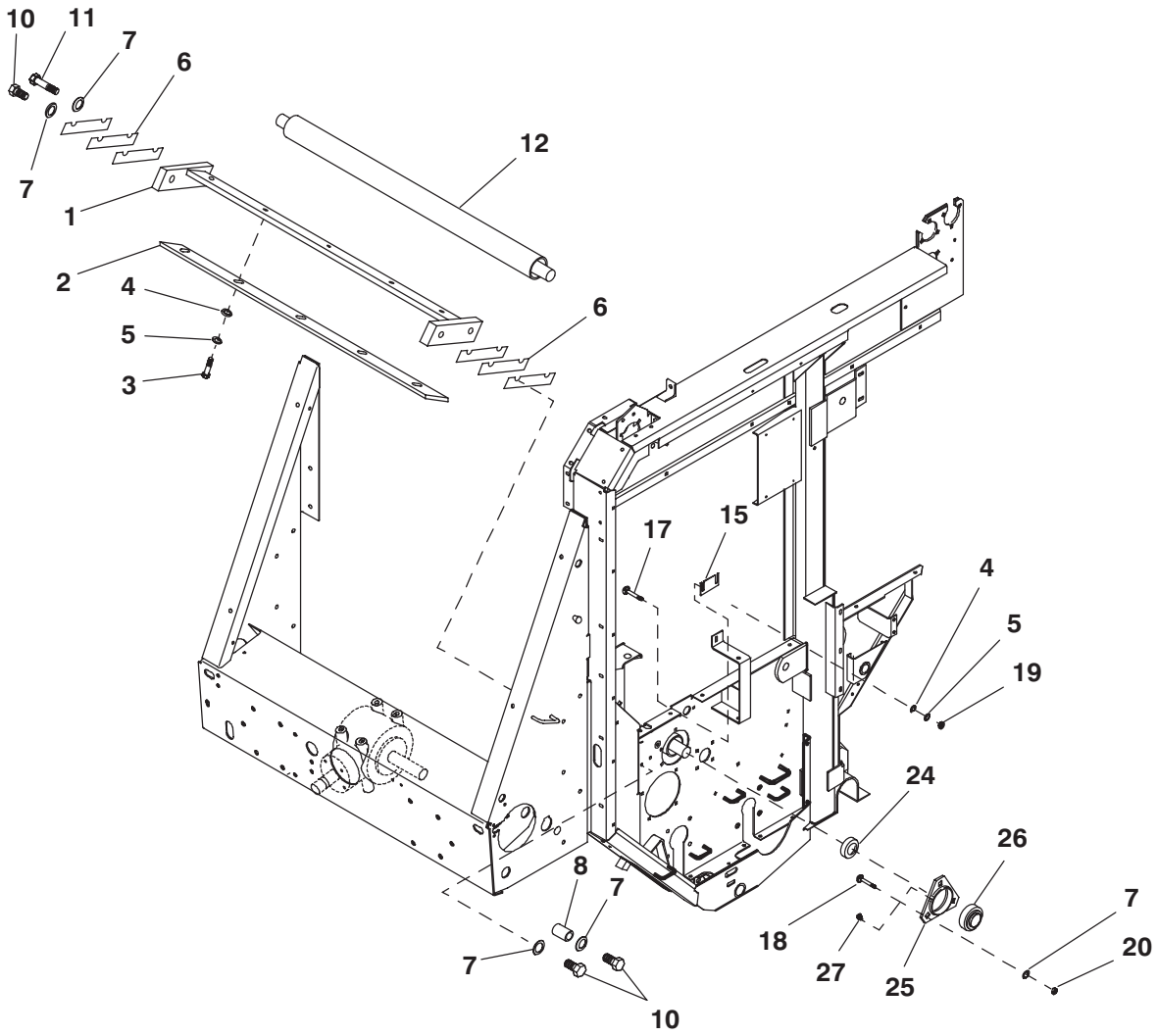

Ref. No.	Part No.	Description	Qty. Req.
01	098409	SCRAPER ASSY (1475)	1
	075694	SCRAPER/ASSY (1475 HIGH MOIST.)	1
	098413	SCRAPER/ASSY (1875)	1
02	098410	BLADE (1475)	1
	088809	BLADE/BEVELED (1475 HIGH MOIST.)	1
	098414	BLADE (1875)	1
03	650487	CS 5/16X1 (1475/1875)	5
		CS 5/16X1 (1475 HIGH MOIST.)	6
04	654004	FW 5/16 (1475/1875)	9
		FW 5/16 (1475 HIGH MOIST.)	10
05	654024	LW 5/16 (1475/1875)	9
		LW 5/16 (1475 HIGH MOIST.)	10
06	098411	SHIM (1475/1875)	AR
	119559	SHIM (1475 HIGH MOIST.)	AR
07	654026	LW 3/8	7
		LW 3/8 (1475 HIGH MOIST.)	9
08	061501	SPACER	1
10	650490	CS 3/8X1	3
11	650533	CS 3/8X1-1/2	1
12	118188	ROLLER/SCRAPER (1475)	1
	119052	ROLLER/SCRAPER (1475 HIGH MOISTURE)	1
	118323	ROLLER/SCRAPER (1875)	1
15	059692	SHIM	2
17	650573	CB 5/16X1	4
18	650704	CB 3/8X1	3
19	653007	HN 5/16	4
20	653010	HN 3/8	3
24	119055	ROLLER/SPACER	1
25	074963	HOUSING/BEARING	1
26	074964	BEARING/BALL	1
27	570009	FITTING/GREASE	1

RB1475/1875 - DRIVE ROLLERS

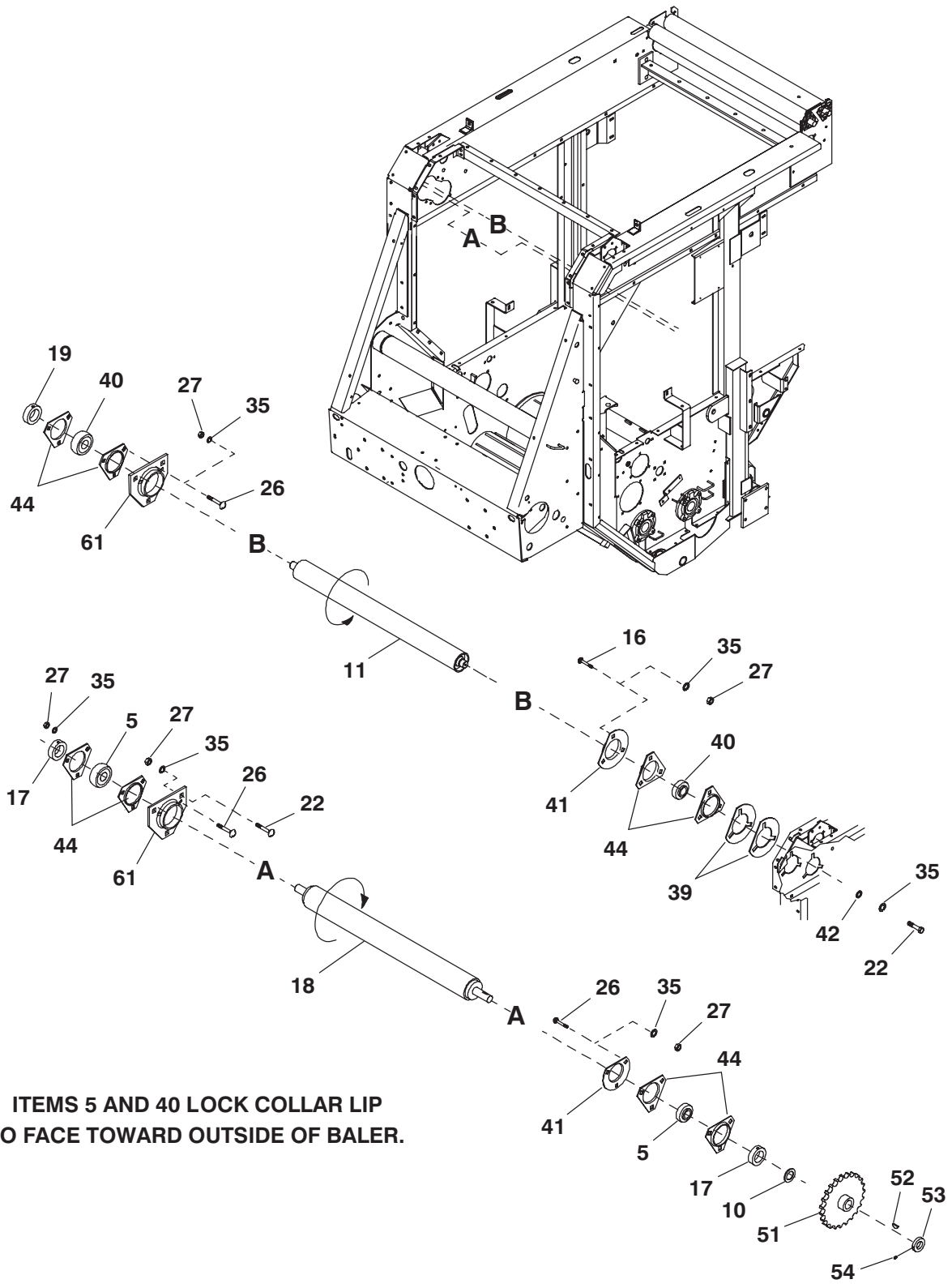

ITEMS 5 AND 40 LOCK COLLAR LIP TO FACE TOWARD OUTSIDE OF BALER.

Ref. No.	Part No.	Description	Qty. Req.
05	057179	BEARING/BALL	2
10	H7165	FW 1-17/64 SPECIAL	AR
11	119473	ROLLER/REWRAP (1475)	1
	119474	ROLLER/REWRAP (1875)	1
16	650773	CB 3/8X1-1/2	3
17	520090	COLLAR/BEARING	2
18	127048	ROLLER/UPPER DRIVE (1475)	1
	127049	ROLLER/UPPER DRIVE (1875)	1
19	520093	COLLAR/BEARING	1
22	650490	CS 3/8X1	5
26	650704	CB 3/8X1	9
27	653010	HN 3/8	15
35	654026	LW 3/8	19
39	066185	SHIM/FLANGETTE	2
40	520158	BEARING/BALL	1
41	057965	SHIELD/ROLL LT	2
42	17H361	FW/WASHER/SAFETY FLANGE	2
44	077526	RETAINER/72 MM BEARING HOUSING	8
51	118282	SPROCKET/80B23	1
52	655539	KEY/WOODRUFF 1/4X1-1/8	1
53	058489	COLLAR/SET	1
54	650204	SHSS 5/16X3/8	2
61	070702	SHIELD/ROLL TICOR RT	2

RB1475/1875 - PACKING ROLLER & RIGHT ROLL ARM (AFTER SN25000-1475 & SN17900-1875)

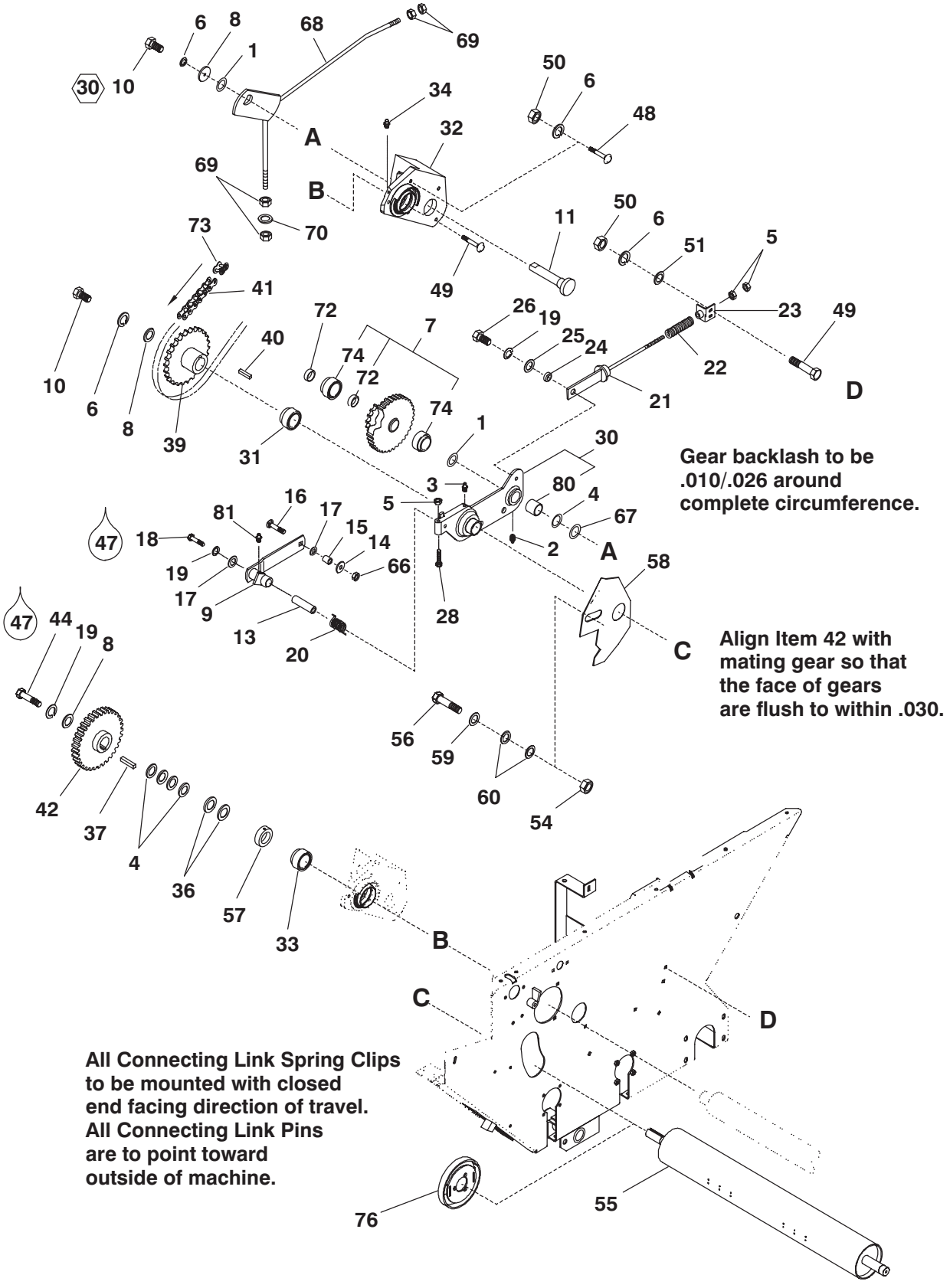

RB1475/1875 - PACKING ROLLER & RIGHT ROLL ARM (AFTER SN25000-1475 & SN17900-1875)

Ref. No.	Part No.	Description	Qty. Req.
01	062755	FW 1-9/32 SPECIAL	AR
02	570023	FITTING/GREASE	1
03	570002	FITTING/GREASE	1
04	069370	FW 1-13/32 SPECIAL	AR
05	653018	HN 1/2	3
06	654026	LW 3/8	6
07	118174	GEAR/SPROCKET ASSY	1
08	17H361	FW/WASHER/SAFETY FLANGE	3
09	145262	ARM/IDLER ASSY	1
10	650490	CS 3/8X1	2
11	119289	SHAFT/PIVOT	1
13	145577	PIVOT/SPACER	1
14	074028	FW 17/32 SPECIAL	1
15	066369	SPACER	1
16	650791	CB 1/2X1-3/4	1
17	651148	FW 17/32 SPECIAL	AR
18	650744	CS 1/2X4	1
19	654030	LW 1/2	2
20	077794	SPRING/TORSION	1
21	119295	ARM/SPRING GUIDE ASSY	1
22	066221	SPRING/COMPRESSION	1
23	075413	MOUNT/SPRING ASSY	1
24	066226	BUSHING/PIVOT	1
25	654009	FW 1/2	1
26	650494	CS 1/2X1	1
28	062342	BOLT/SPECIAL 1/2X3-1/2	1
29	118695	BUSHING/BRONZE	1
30	141496	ARM/ROLL RT	1
31	041499	BEARING/BALL	1
32	118689	HOUSING/SUPPORT	1
33	074964	BEARING/BALL	1
34	570004	FITTING/GREASE	1
36	070736	FW 1-15/32 SPECIAL	2
37	059566	KEY	1
39	118193	SPROCKET/60B26	1
40	056230	KEY/SQUARE	1
41	118364	CHAIN/SPECIAL #60HEX46 LINKS	1
42	118185	GEAR/ASSY	1
44	650495	CS 1/2X1-1/4	1
47		LOCTITE	
48	650860	CB 3/8X1-3/4	1
49	650704	CB 3/8X1	4
50	653010	HN 3/8	4
51	654006	FW 3/8	2
54	071701	LN 5/16	1
55	141500	ROLLER/PACKING ASSY (1475)	1
	118324	ROLLER/PACKING ASSY (1875)	1
56	650486	CS 5/16X3/4	1
57	520067	COLLAR/BEARING	1
58	141477	COVER/RT	1
59	B11296	FW 11/32	1
60	654002	FW 1/4	2
66	071706	LN 1/2	1
67	064479	FW 1-25/64 SPECIAL	AR
68	120486	PLATE/ASSY	1
69	653021	HN 5/8	4
70	654012	FW 5/8	1
72	118644	SPACER	2
73	127797	LINK/CONNECTOR	1
74	520064	BEARING/BALL	2
76	141049	COVER/ROLLER ASSY (HIGH MOISTURE ONLY)	1
80	118695	BUSHING/BRONZE	1
81	570014	FITTING/GREASE	1

RB1475/1875 - PACKING ROLLER & RIGHT ROLL ARM (BEFORE SN25001-1475 & SN17901-1875)

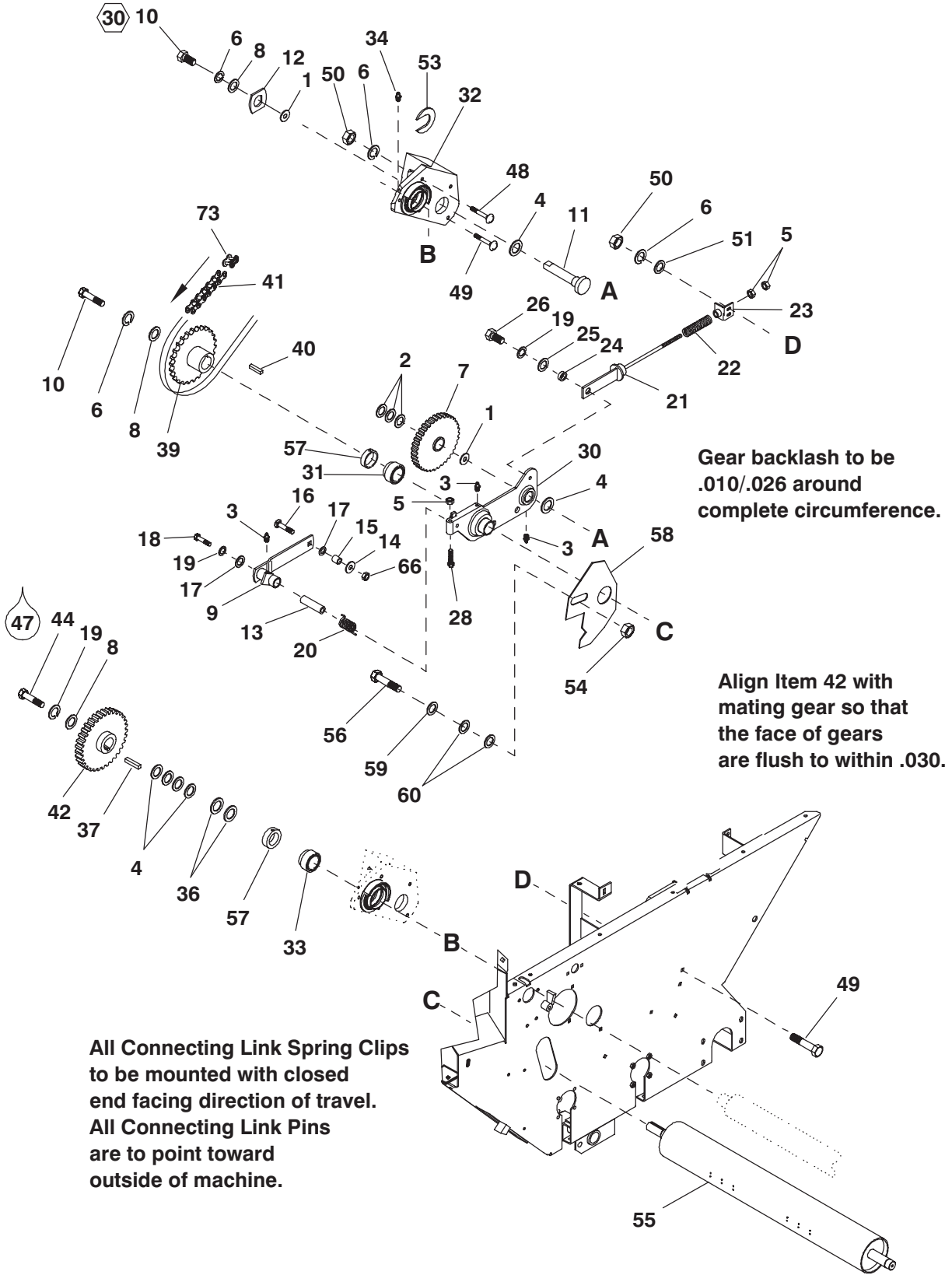

RB1475/1875 - PACKING ROLLER & RIGHT ROLL ARM (BEFORE SN25001-1475 & SN17901-1875)

Ref. No.	Part No.	Description	Qty. Req.
01	062755	FW 1-9/32 SPECIAL	AR
02	075060	FW 1-9/32 SPECIAL (BEFORE SN24001-1475 & 17501-1875)	AR
03	570002	FITTING/GREASE	3
04	069370	FW 1-13/32 SPECIAL	2
05	653018	HN 1/2	3
06	654026	LW 3/8	6
07	118174	GEAR/SPROCKET ASSY	1
08	17H361	FW/WASHER/SAFETY FLANGE	3
09	119297	ARM/IDLER ASSY	1
10	650490	CS 3/8X1	2
11	119289	SHAFT/PIVOT	1
12	119290	RETAINER/SHAFT (BEFORE SN24001-1475 & 17501-1875)	1
13	119301	PIVOT/SPACER	1
14	074028	FW 17/32 SPECIAL	1
15	074027	SPACER	1
16	650774	CB 1/2X2	1
17	400-28850	FW 17/32 SPECIAL	AR
18	650744	CS 1/2X4	1
19	654030	LW 1/2	3
20	077794	SPRING/TORSION	1
21	119295	ARM/SPRING GUIDE ASSY	1
22	066221	SPRING/COMPRESSION	1
23	075413	MOUNT/SPRING ASSY	1
24	066226	BUSHING/PIVOT	1
25	654009	FW 1/2	1
26	650494	CS 1/2X1	1
28	062342	BOLT/SPECIAL 1/2X3-1/2	1
30	118691	ARM/ROLL RT	1
31	041499	BEARING/BALL	1
32	118689	HOUSING/SUPPORT	1
33	074964	BEARING/BALL	1
34	570004	FITTING/GREASE	1
35	069370	FW 1-13/32 SPECIAL	AR
36	070736	FW 1-15/32 SPECIAL	2
37	059566	KEY	1
39	118193	SPROCKET/60B26	1
40	056230	KEY/SQUARE	1
41	118364	CHAIN/SPECIAL #60HEX46 LINKS	1
42	118185	GEAR/ASSY	1
44	650495	CS 1/2X1-1/4	1
47		LOCTITE	
48	650860	CB 3/8X1-3/4	1
49	650704	CB 3/8X1	4
50	653010	HN 3/8	4
51	654006	FW 3/8	2
53	042826	FW 9/16 OPEN END (BEFORE SN24001-1475 & 17501-1875)	AR
54	071701	LN 5/16	1
55	118199	ROLLER/PACKING ASSY (1475)	1
	118324	ROLLER/PACKING ASSY (1875)	1
56	650486	CS 5/16X3/4	1
57	520067	COLLAR/BEARING	2
58	119291	COVER/RT	1
59	B11296	FW 11/32	1
60	654002	FW 1/4	2
66	071706	LN 1/2	1
73	127797	LINK/CONNECTOR	1

RB1475/1875 - LEFT ROLL ARM

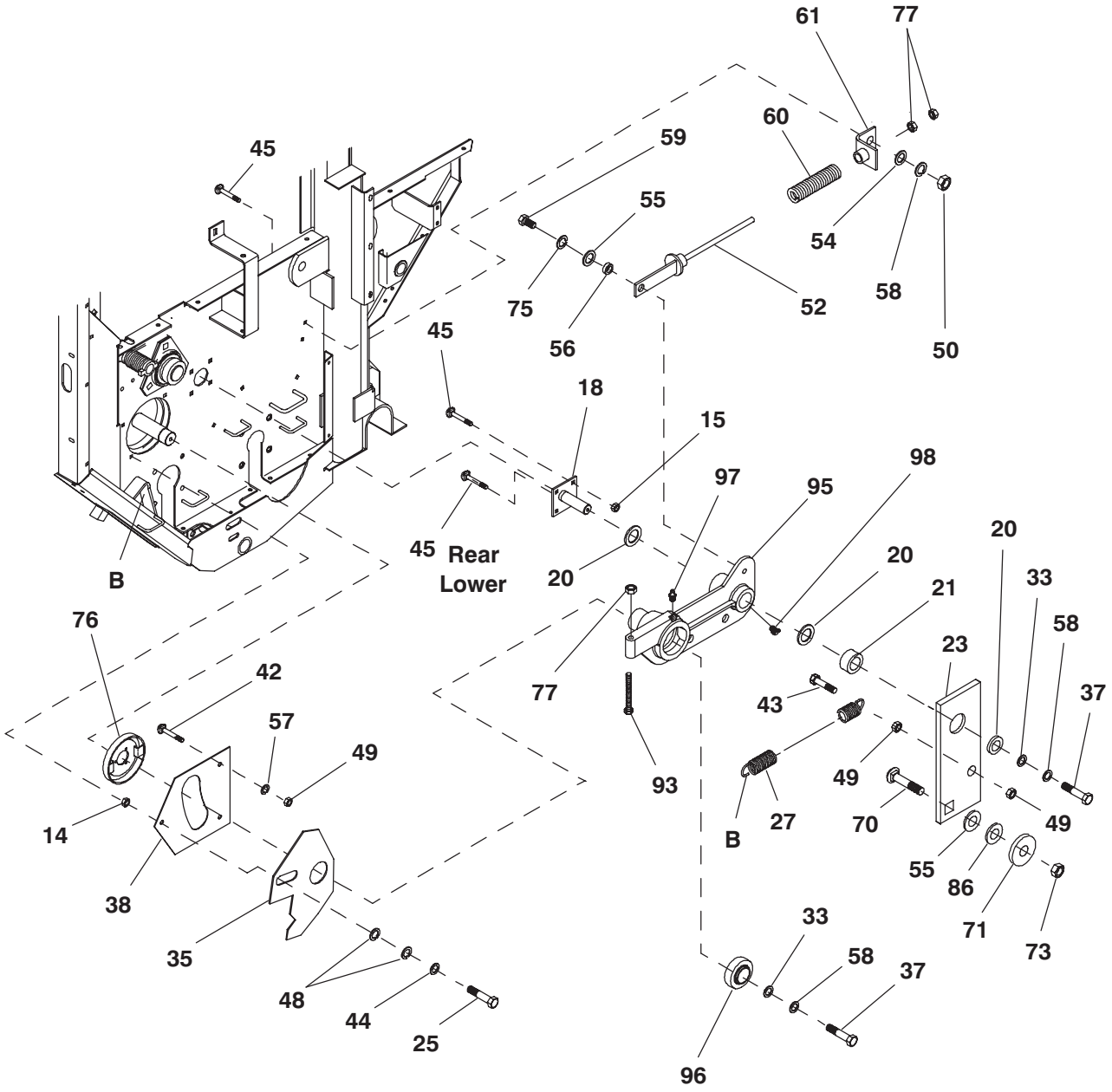

ADJUST BOTH LEFT AND RIGHT PACKING ROLLER ARMS TO POSITION PACKING ROLLER .25" ABOVE 3/8 RODS ON 8" FLOOR ROLLER. AFTER ADJUSTING PACKING ROLLER HEIGHT, ADJUST ITEM 60 ON BOTH LEFT AND RIGHT SIDE TO 9 INCHES COMPRESSED LENGTH.

ITEM 23 & 95 TO SWING FREELY AFTER HARDWARE IS SECURED.

Lock Collar Lip To Face Outward

Ref. No.	Part No.	Description	Qty. Req.
14	071701	LN 5/16	1
15	071703	LN 3/8	4
18	118522	SHAFT/JACK LT ASSY	1
20	062755	FW 1-9/32 SPECIAL	3
21	070749	SPACER	1
23	120501	ARM/IDLER (AFTER SN24000-1475 & 17500-1875)	1
	118635	ARM/IDLER (BEFORE SN24001-1475 & 17501-1875)	1
25	650486	CS 5/16X3/4	1
27	061806	SPRING	1
33	17H361	FW/WASHER/SAFETY FLANGE	1
35	141476	COVER/LT (AFTER SN25000-1475 & 17900-1875)	1
	126826	COVER/LT (BEFORE SN25001-1475 & 17901-1875)	1
37	650490	CS 3/8X1	2
38	141475	PLATE (AFTER SN25000-1475 & 17900-1875)	1
	126823	PLATE (BEFORE SN25001-1475 & 17901-1875)	1
42	650687	CB 5/16X3/4	2
43	650487	CS 5/16X1	1
44	B11296	FW 11/32	1
45	650704	CB 3/8X1	4
48	654002	FW 1/4	2
49	653007	HN 5/16	4
50	653010	HN 3/8	2
52	119295	ARM/SPRING GUIDE ASSY	1
54	654006	FW 3/8	2
55	654009	FW 1/2	AR
56	066226	BUSHING/PIVOT	1
57	654024	LW 5/16	2
58	654026	LW 3/8	4
59	650494	CS 1/2X1	1
60	066221	SPRING/COMPRESSION	1
61	075413	MOUNT/SPRING ASSY	1
70	650834	CB 1/2X1-1/2	1
71	074028	FW 17/32	1
73	071706	LN 1/2	1
75	654030	LW 1/2	1
76	141049	COVER/ROLLER ASSY (HIGH MOISTURE ONLY)	1
77	653018	HN 1/2	3
86	400-28850	FW 17/32	AR
93	062342	BOLT 1/2X3-1/2	1
95	141495	ARM/ROLL LT (AFTER SN25000-1475 & 17900-1875)	1
	118658	ARM/ROLL LT (BEFORE SN25001-1475 & 17901-1875)	1
96	041499	BEARING/BALL	1
97	570002	FITTING/GREASE	1
98	570004	FITTING/GREASE	1

RB1475/1875 - BALE STARTER

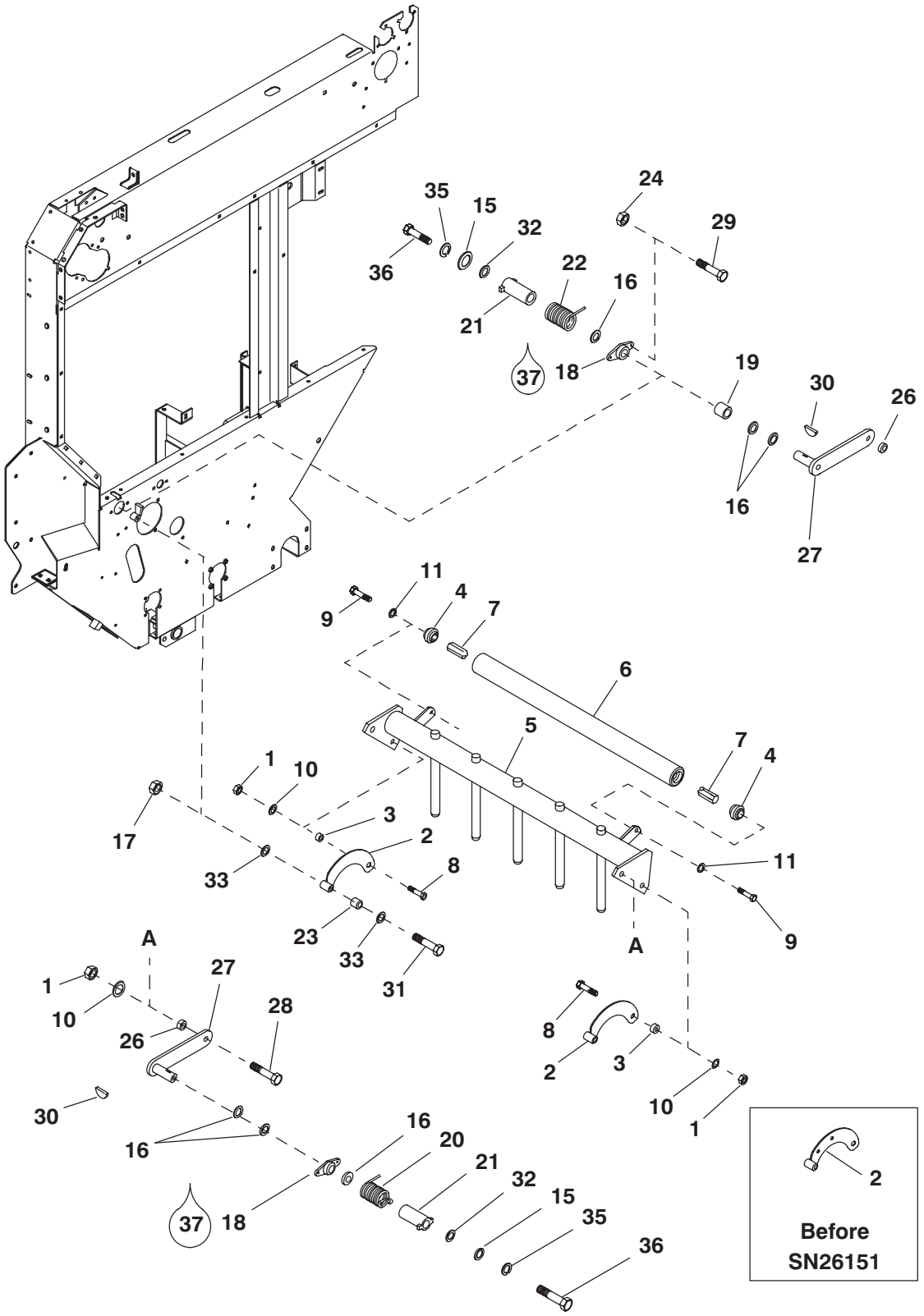

Ref. No.	Part No.	Description	Qty. Req.
01	071706	LN 1/2	4
02	153439	LINK/ASSY (AFTER SN26150-1475 & 18800-1875)	2
	084622	LINK/ASSY (BEFORE SN26151-1475 & 18801-1875)	2
03	084624	BEARING/STARTER PIVOT	2
04	084630	BEARING/.88 HEX	2
05	118473	BALE/STARTER ASSY (1475)	1
	141506	BALE/STARTER ASSY (HI-MOISTURE)	1
	118474	BALE/STARTER ASSY (1875)	1
06	098538	ROLL/BALE STARTER ASSY (1475)	1
	098554	ROLL/BALE STARTER ASSY(1875)	1
07	098551	SHAFT/BALE STARTER (1475)	1
	098553	SHAFT/BALE STARTER (1875)	1
08	650453	CS 1/2X1-1/2	2
09	650494	CS 1/2X1	2
10	654009	FW 1/2	4
11	654030	LW 1/2	2
15	063586	FW 13/32 SPECIAL	2
16	066487	FW 1-1/32 SPECIAL	6
17	067847	NILN 3/8	2
18	070791	BEARING/BALE STARTER	2
19	070795	SLEEVE	2
20	070796	SPRING/BALE STARTER LT	1
21	070797	PLUG/SPRING	2
22	070798	SPRING/BALE STARTER	1
23	070804	SPACER/PIVOT	2
24	071703	LN 3/8	4
26	084624	BEARING/STARTER PIVOT	2
27	097419	LINK/UPPER ASSY	2
28	650453	CS 1/2X1-1/2 (1475)	2
29	650490	CS 3/8X1	4
30	650513	KEY/WOODRUFF 1/4X1	2
31	650818	CS 3/8X3	2
32	654004	FW 5/16	AR
33	654006	FW 3/8	8
35	654026	LW 3/8	2
36	650491	CS 3/8X1-1/4	2
37		COMPOUND/ANTI-SEIZE LUBRICANT	

RB1475/1875 - UPPER ROLLERS

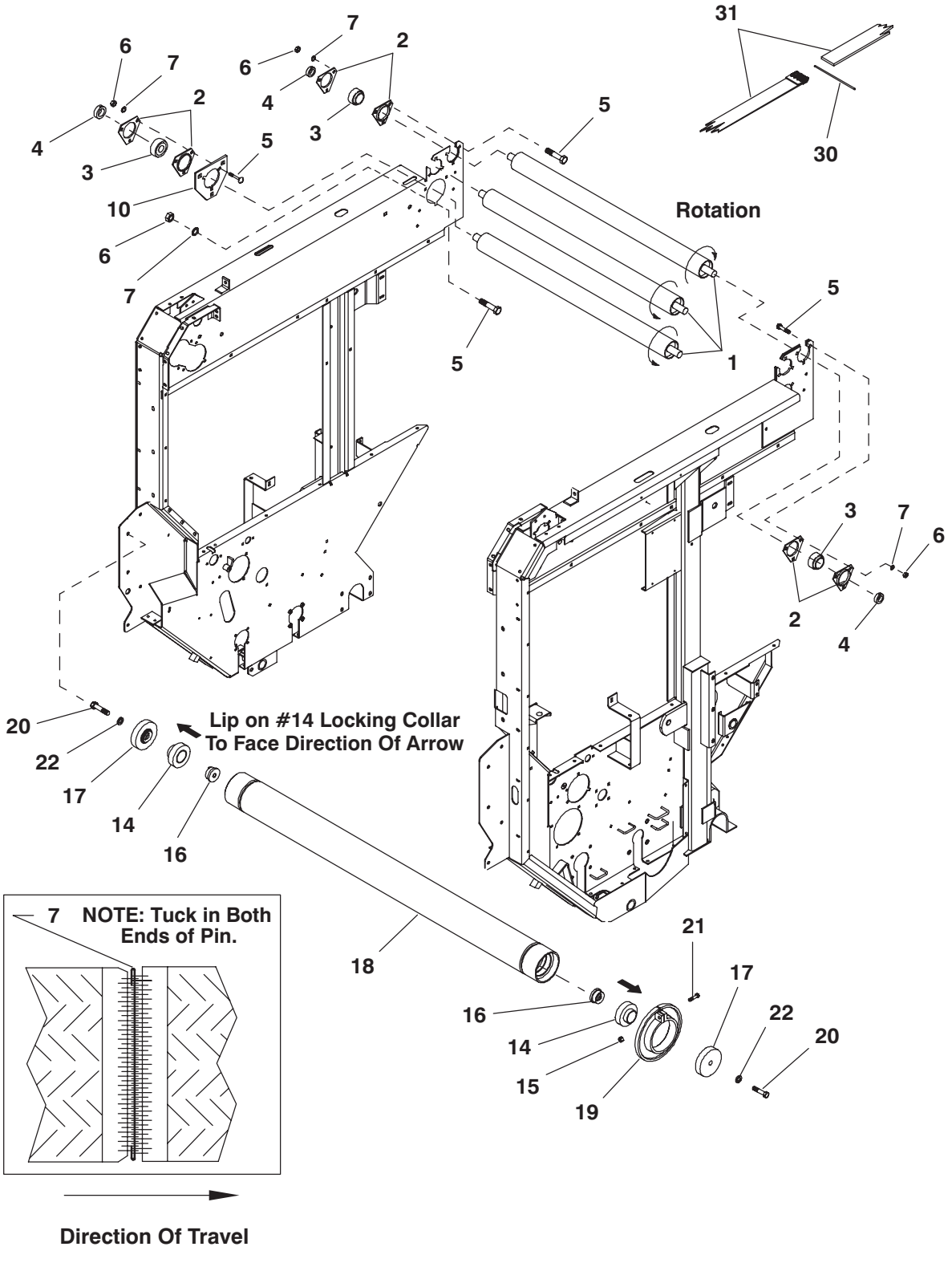

Ref. No.	Part No.	Description	Qty. Req.
01	071767	ROLLER/REAR (1475)	3
	127114	ROLLER/REAR (1875)	3
02	027003	RETAINER/BEARING	12
03	520065	BEARING/BALL	6
04	520085	COLLAR/BEARING	6
05	650704	CB 3/8X1	21
06	653010	HN 3/8	21
07	654026	LW 3/8	21
10	066183	PLATE	1
14	069485	BEARING/1-7/16 BALL	2
15	071701	LN 5/16	1
16	113368	BEARING/NUT	2
17	113369	SPACER/BEARING	2
18	113395	TUBE/ASSY (1475)	1
	118346	TUBE/ASSY (1875)	1
19	118329	IDLER/SPROCKET	1
20	650503	CS 1/2X2-1/2	2
21	650577	CS 5/16X1-1/2	1
22	654030	LW 1/2	2
30	094104	PIN/BELT CABLE CORE (1475)	6
		PIN/BELT CABLE CORE (1875)	8
31	119476**ab**	BELT/BALER (1475)	6
	119477**ab**	BELT/BALER (1875)	8

a) Includes 094104 Belt Pin.

b) The following are optional: Belt Lacing Cable (078112), Belt Relacing Kit (073390), Belt Lacing Kit (802700) and the Dutchman Kit (126230).

RB1475/1875 - IDLERS, SPROCKETS & CHAINS

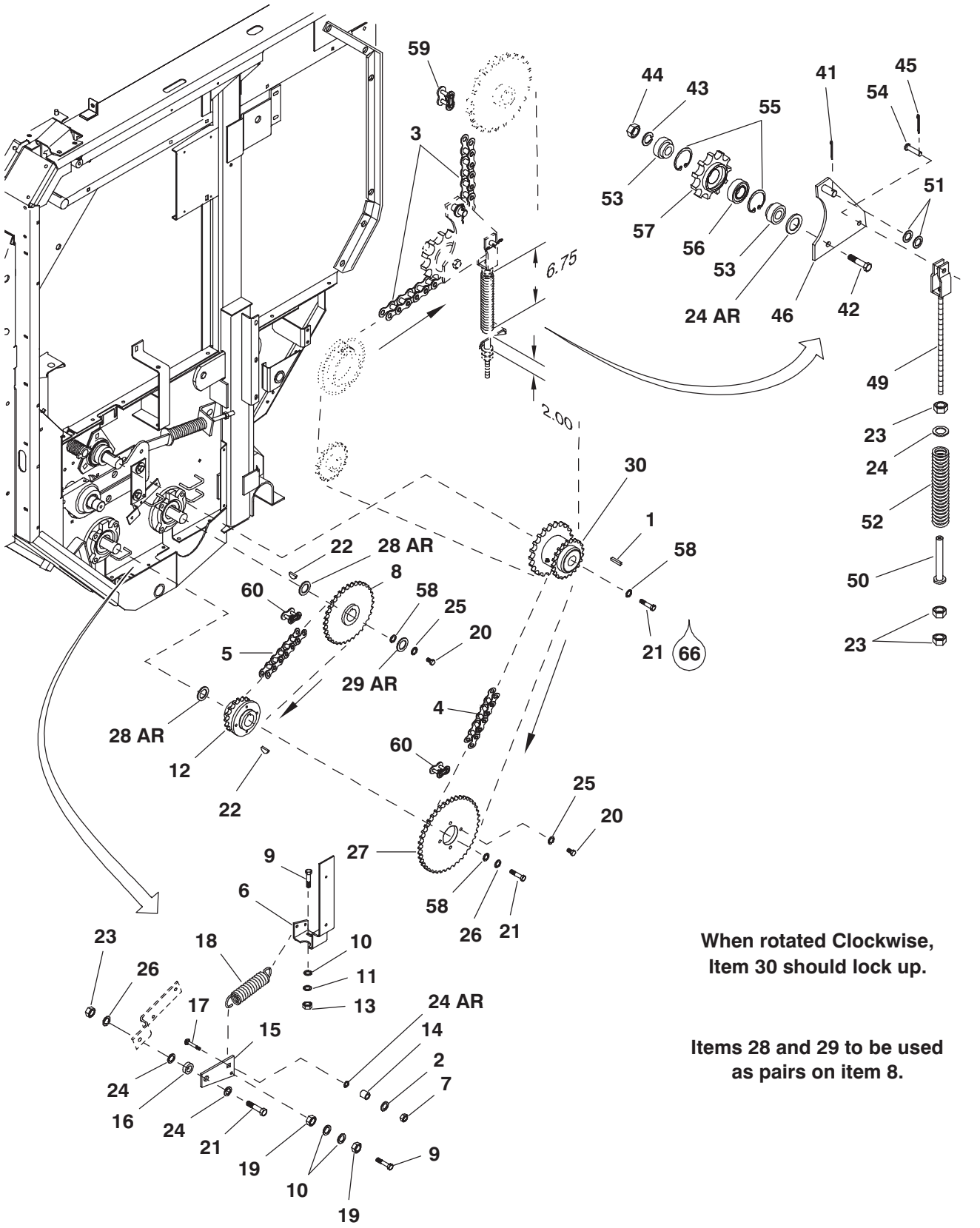

When rotated Clockwise, Item 30 should lock up.

Items 28 and 29 to be used as pairs on item 8.

Ref. No.	Part No.	Description	Qty. Req.
01	B11221	KEY/CLUTCH	1
02	074028	FW 17/32 SPECIAL	1
03	118361	CHAIN/SUPER #80X162 LINKS (1475)	1
	118692	CHAIN/SUPER #80X186 LINKS (1875)	1
04	118362	CHAIN/SPECIAL #60HEX72 LINKS	1
05	118363	CHAIN/SPECIAL #60HEX62 LINKS	1
06	119317	MOUNT/GUARD	1
07	071706	LN 1/2	1
08	118256	SPROCKET/60D34	1
09	650545	CS 5/16X1-1/4	3
10	654004	FW 5/16	4
11	654024	LW 5/16	2
12	118259	SPROCKET/60C17T	1
13	653007	HN 5/16	2
14	074027	SPACER	1
15	119319	ARM/IDLER	1
16	066226	BUSHING/PIVOT	1
17	650791	CB 1/2X1-3/4	1
18	079061	SPRING/EXTENSION	1
19	071701	LN 5/16	2
20	650490	CS 3/8X1 (1475)	5
		CS 3/8X1 (1875)	2
21	650495	CS 1/2X1-1/4	3
22	650601	KEY/WOODRUFF 3/8X1-1/2	2
23	653018	HN 1/2	4
24	654009	FW 1/2	AR
25	654026	LW 3/8	5
26	654030	LW 1/2 (1475)	2
		LW 1/2 (1875)	11
27	119049	SPROCKET/60A42	1
28	042158	FW 1-21/32	3
29	17H361	FW/SAFETY FLANGE	3
30	NS[a]	CLUTCH/OVERRUNNING ASSY	1
41	655020	CP 3/16X1-1/2	1
42	650694	CS 5/8X2-1/2	1
43	654032	LW 5/8	1
44	653021	HN 5/8	1
45	655006	CP 1/8X1	1
46	118544	PLATE/ASSY	1
49	118300	ARM/SPRING GUIDE ASSY	1
50	118304	GUIDE/ROD ASSY	1
51	056937	FW 25/32	2
52	061508	SPRING/COMP BALE STARTER	1
53	385-10121	SPUD	2
54	045660	PIN/CLEVIS 1/2X1-1/2	1
55	056287	RING/RETAINING	2
56	010-10103	BEARING	1
57	370-10269	SPROCKET	1
58	057557	FW 17/32	3
59	129506	LINK/CONNECTOR	1
60	127797	LINK/CONNECTOR	2
66		SEALANT WICKING	

a) Not available as a Service Part.
See Overrunning Clutch breakdown for details.

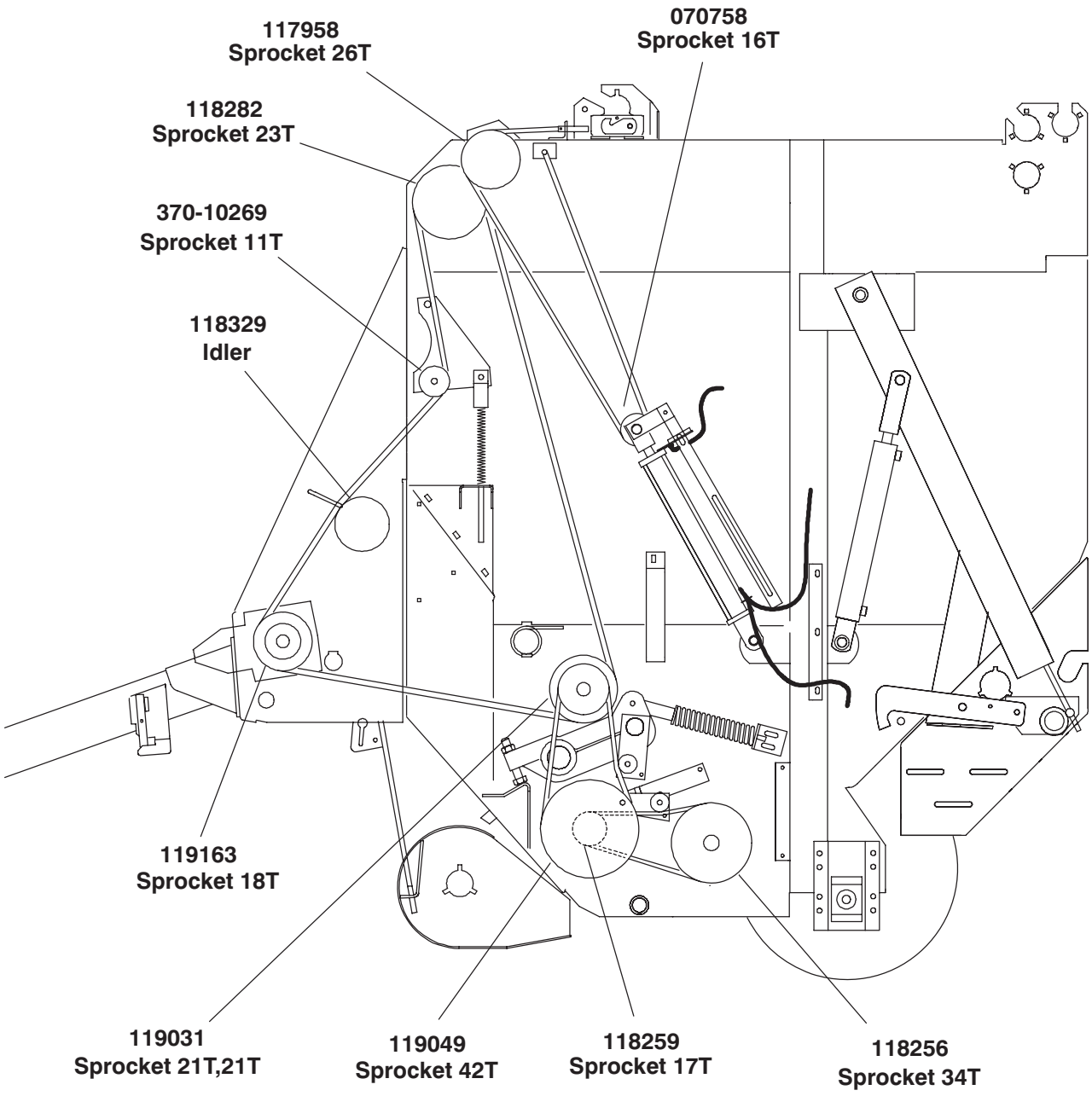
117958
Sprocket 26T
070758
Sprocket 16T
118282
Sprocket 23T
370-10269
Sprocket 11T
118329
Idler
119163
Sprocket 18T
119031
Sprocket 21T,21T
119049
Sprocket 42T
118259
Sprocket 17T
118256
Sprocket 34T

LEFT SIDE

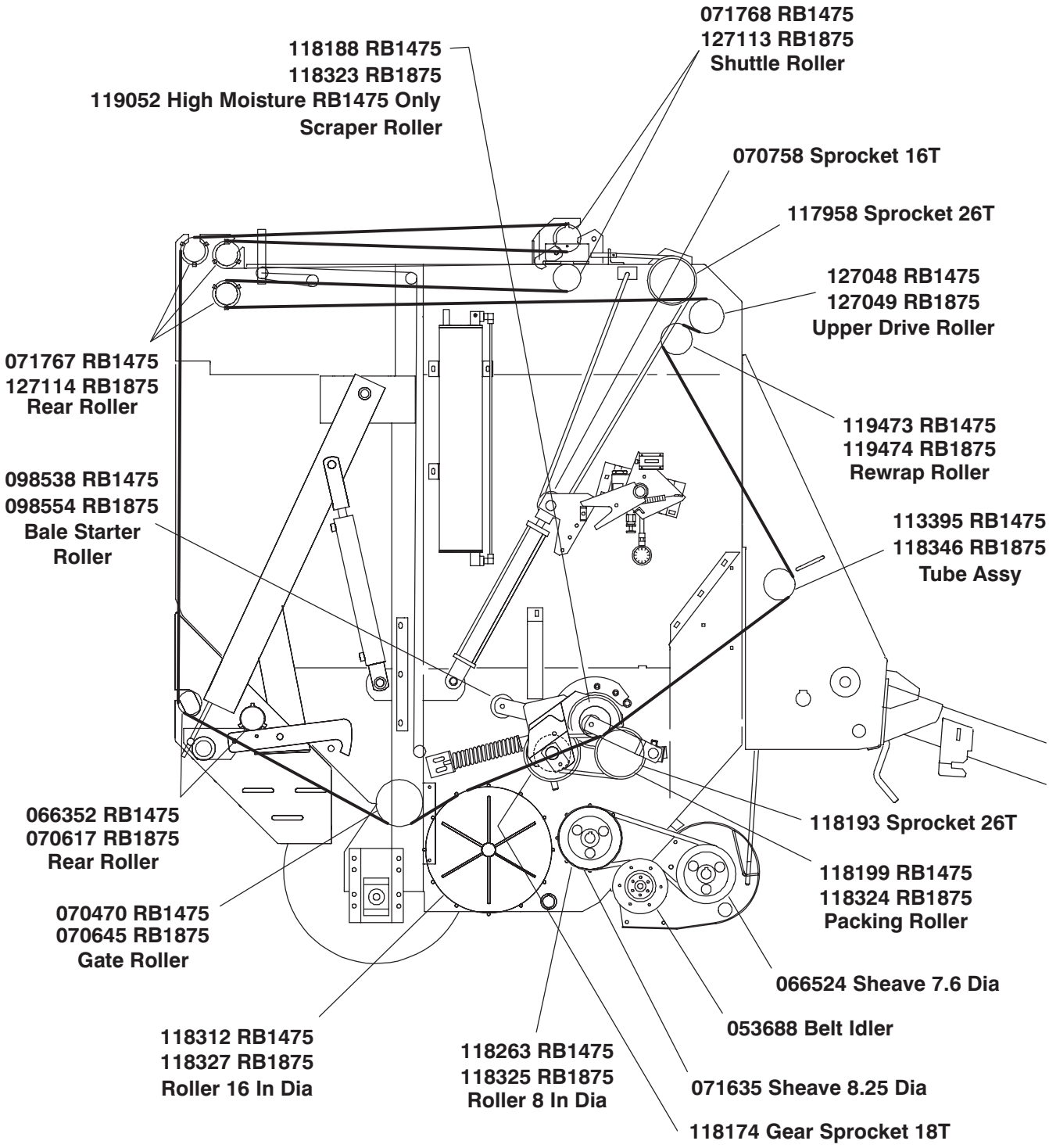
071768 RB1475
127113 RB1875
Shuttle Roller
118188 RB1475
118323 RB1875
119052 High Moisture RB1475 Only
Scraper Roller
070758 Sprocket 16T
117958 Sprocket 26T
127048 RB1475
127049 RB1875
Upper Drive Roller
071767 RB1475
127114 RB1875
Rear Roller
119473 RB1475
119474 RB1875
Rewrap Roller
098538 RB1475
098554 RB1875
Bale Starter
Roller
113395 RB1475
118346 RB1875
Tube Assy
066352 RB1475
070617 RB1875
Rear Roller
118193 Sprocket 26T
118199 RB1475
118324 RB1875
Packing Roller
070470 RB1475
070645 RB1875
Gate Roller
066524 Sheave 7.6 Dia
053688 Belt Idler
118312 RB1475
118327 RB1875
Roller 16 In Dia
118263 RB1475
118325 RB1875
Roller 8 In Dia
071635 Sheave 8.25 Dia
118174 Gear Sprocket 18T

RIGHT SIDE

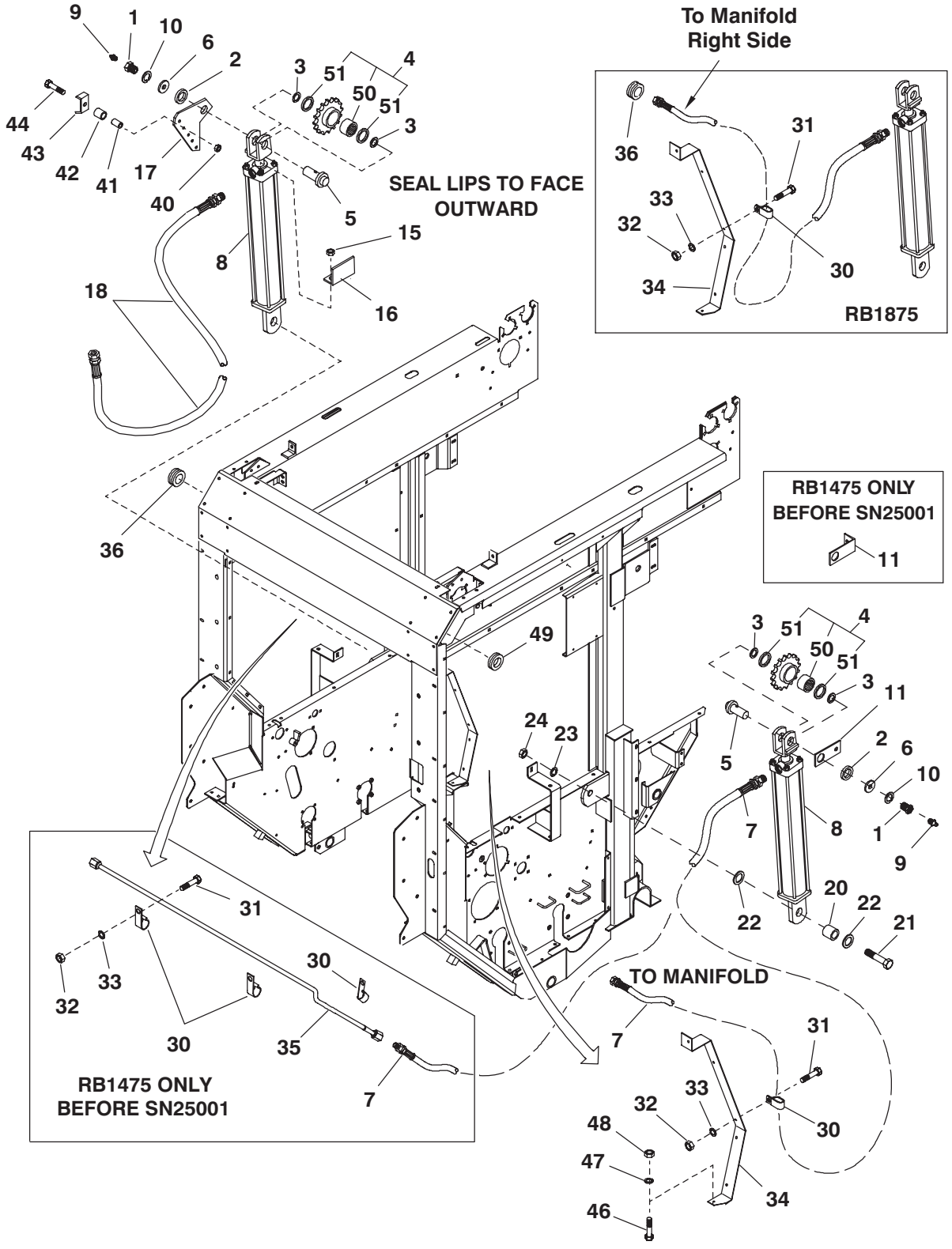
To Manifold
Right Side
RB1875
SEAL LIPS TO FACE
OUTWARD
RB1475 ONLY
BEFORE SN25001
11
RB1475 ONLY
BEFORE SN25001
TO MANIFOLD
9
1
10
6
2
3
51
4
50
51
3
44
43
42
41
17
40
5
15
8
16
18
36
49
24
23
5
11
2
6
10
1
9
7
8
22
20
22
21
31
33
32
30
35
7
48
47
46
34

Ref. No.	Part No.	Description	Qty. Req.
01	9H240	SCREW/ADJUSTMENT LINK	2
02	B11162B	FW 1-17/64 SPECIAL	2
03	061529	FW/WASHER/SHIM	4
04	070758	SPROCKET/60C16 ASSY	2
05	070765	PIN	2
06	071520	FW 17/32	2
07	120883	HOSE/ASSY (AFTER SN25000-1475)	1
	126665	HOSE/ASSY (BEFORE SN25001-1475)	1
	119445	HOSE/ASSY (1875)	1
08	127115[a]	CYLINDER/HYD ASSY 3X20-1/2 (1475)	2
	127117[a]	CYLINDER/HYD ASSY 3X25 (1875)	2
09	570019	FITTING/GREASE	2
10	654030	LW 1/2	2
11	141070	PLATE (AFTER SN25000-1475)	1
	117969	BRACKET (AUTO CONTROL ONLY) (BEFORE SN25001-1475)	1
15	071706	LN 1/2	2
16	074793	ANGLE/SUPPORT	1
17	094057	ARM/TRIP	1
18	126664	HOSE/ASSY	1
20	070757	SPACER	2
21	650710	CS 5/8X2-1/4	2
22	654012	FW 5/8	4
23	654032	LW 5/8	2
24	653021	HN 5/8	2
30	075505	CLAMP (AFTER SN25000-1475)	2
	056773	CLAMP (BEFORE SN25001-1475)	3
	075505	CLAMP (1875)	2
31	650490	CS 3/8X1	2
32	653010	HN 3/8	2
33	654026	LW 3/8	2
34	120880	BRACKET/HOSE (1475) (AFTER SN25000)	1
	119437	BRACKET/HOSE (1875) (AFTER SN18200)	1
35	118557	TUBE/HYD. (1475 Only) (BEFORE SN25001)	1
36	119888	GROMMET/RUBBER	1
40	071703	LN 3/8	1
41	072171	SPACER	1
42	072172	SPACER	1
43	059453	CLAMP/TUBE	1
44	650528	CS 3/8X2	1
46	650486	CS 5/16X3/4 (AFTER SN25000-1475)	1
47	654024	LW 5/16 (AFTER SN25000-1475)	1
48	653007	HN 5/16 (AFTER SN25000-1475)	1
49	160244	GROMMET (AFTER SN25000-1475 & 18200-1875)	1
50	051250	BEARING/ROLLER	2
51	053342	SEAL/OIL	4

a) For component breakdown, see page entitled TDC Cylinder.

RB1475/1875 - TDC HYDRAULICS

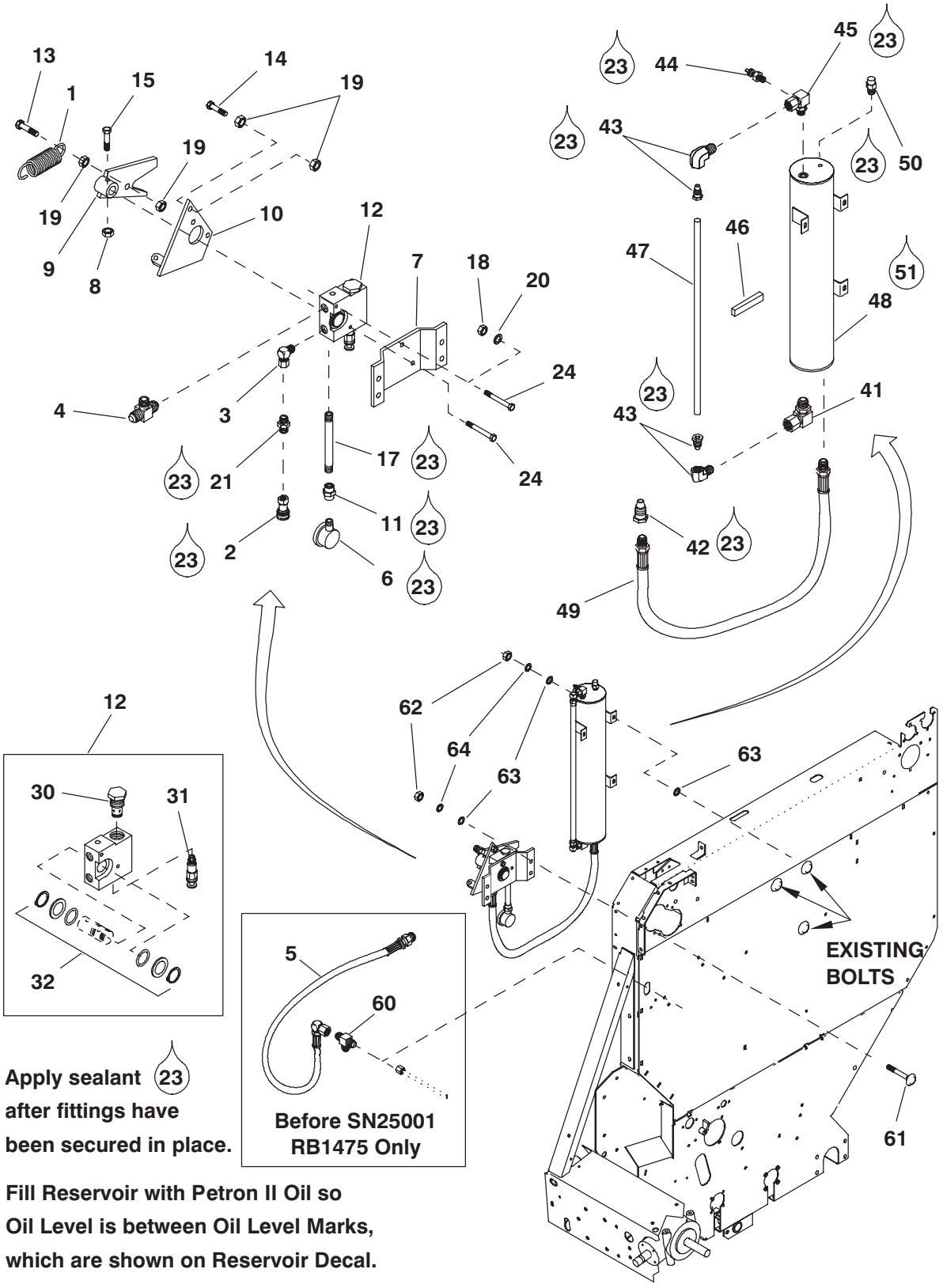

Apply sealant (23) after fittings have been secured in place.

Fill Reservoir with Petron II Oil so Oil Level is between Oil Level Marks, which are shown on Reservoir Decal.

Ref. No.	Part No.	Description	Qty. Req.
01	U10014B	SPRING/PAWL	1
02	056081	QUICK-DISCONNECT	1
03	057831	ELBOW/HYD FITTING 90° (INCLUDES 055898 O-RING)	1
04	072807	TEE/HYD FITTING (1875 Only) (INCLUDES 055898 O-RING)	1
		TEE/HYD FITTING (1475 Only) (AFTER SN25000)	1
05	119626	HOSE/ASSY (1475 Only) (BEFORE SN25001)	1
06	070777	GAUGE/HYDRAULIC PRESSURE	1
07	118989	BRACKET/MANIFOLD	1
08	071703	LN 3/8	1
09	071739	VALVE/TRIP ASSY	1
10	071741	BRACKET/STOP ASSY	1
11	076788	UNION/HYD FITTING	1
12	118791	MANIFOLD ASSY (1475)	1
	118790	MANIFOLD ASSY (1875)	1
13	650491	CS 3/8X1-1/4	1
14	650492	CS 3/8X2-1/2	1
15	650535	CS 3/8X2-1/4	1
17	651022	NIPPLE/PIPE 1/4X4	1
18	653007	HN 5/16	2
19	653010	HN 3/8	4
20	654024	LW 5/16	2
21	062910	UNION/HYD FITTING	1
23		SEALANT WICKING	
24	650833	CS 5/16X3	2
30	119302	VALVE/CHECK	1
31	141471	VALVE/RELIEF (1475)	1
	141472	VALVE/RELIEF (1875)	1
32	094193	KIT/SEAL	1
41	042598	ELBOW/HYD FITTING 90° (INCLUDES 055896 O-RING)	1
42	056080	QUICK-DISCONNECT (MALE)	1
43	070610[a]	ELBOW/HYD FITTING 90°	2
44	070612	VALVE/TANK	1
45	070775	ELBOW/90° (INCLUDES 055896 O-RING)	1
46	071558	MAGNET	1
47	119584	TUBE/OIL LEVEL (1475 & 1875)	1
48	118713	RESERVOIR/ASSY (1475)	1
	118673	RESERVOIR/ASSY (1875)	1
49	126663	HOSE/ASSY	1
50	127189	VALVE/RELIEF 300 PSI	1
51		OIL/HYD	
60	064669	TEE/HYD FITTING (1475 Only) (BEFORE SN25001)	1
61	650704	CB 3/8X1	4
62	653010	HN 3/8 (1475)	12
		HN 3/8 (1875)	13
63	654006	FW 3/8	8
64	654026	LW 3/8 (1475)	10
		LW 3/8 (1875)	11

a) For repair of Brass Sleeve, use 070644.

RB1475/1875 - SHUTTLE ASSEMBLY

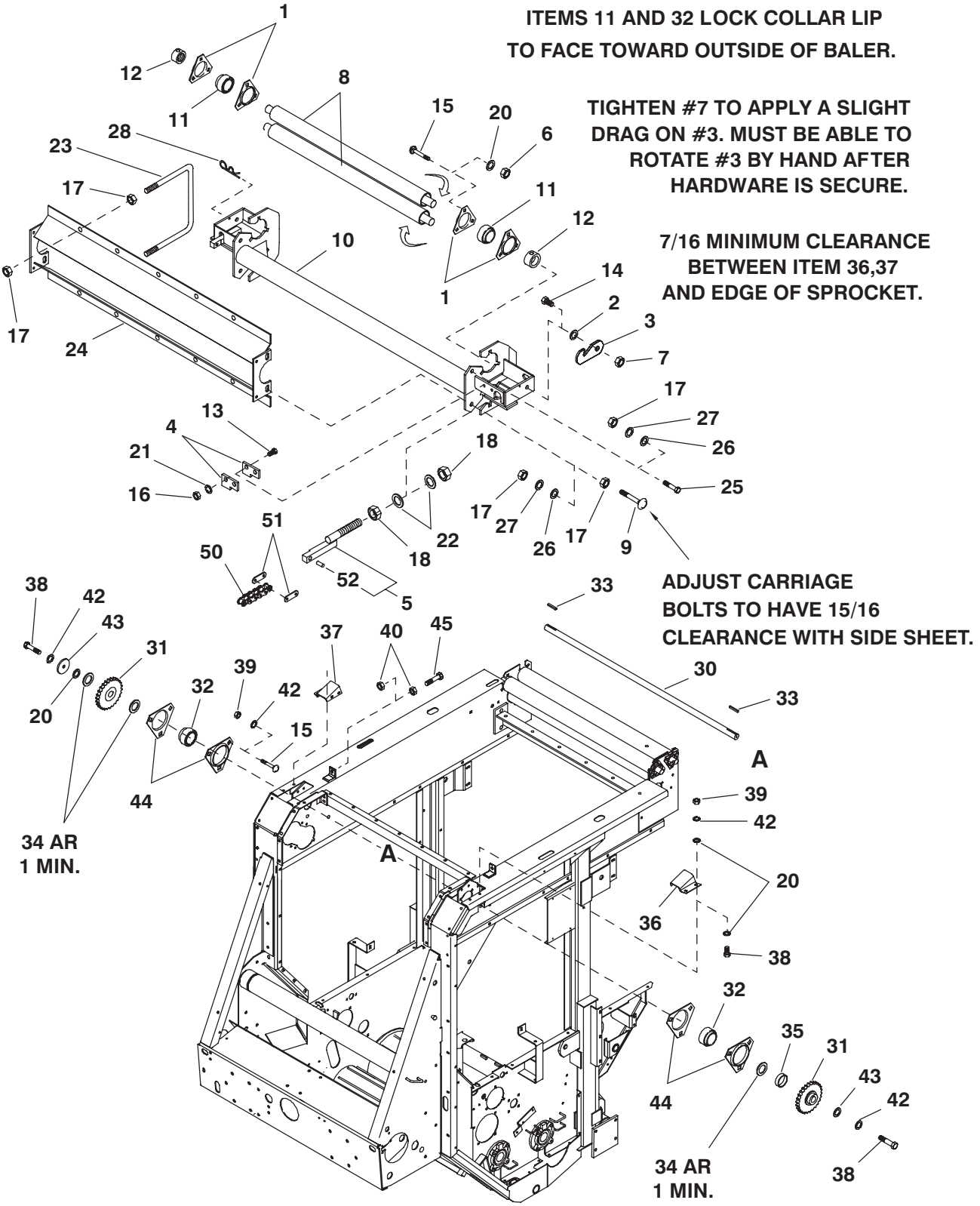

Ref. No.	Part No.	Description	Qty. Req.
01	027003	RETAINER/BEARING	8
02	055142	WASHER/BELLEVILLE	2
03	057980	HOOK	2
04	118712	RETAINER	2
05	070730	TAKE UP/CHAIN	1
06	071703	LN 3/8	12
07	071706	LN 1/2	2
08	071768	ROLLER/SHUTTLE (1475)	2
	127113	ROLLER/SHUTTLE (1875)	2
09	078033	CB 1/2X2	2
10	118700	SHUTTLE/ASSY (1475)	1
	118701	SHUTTLE/ASSY (1875)	1
11	520065	BEARING/BALL	4
12	520085	COLLAR/BEARING	4
13	650487	CS 5/16X1	2
14	650495	CS 1/2X1-1/4	2
15	650704	CB 3/8X1	23
16	653007	HN 5/16	2
17	653018	HN 1/2 (1475)	26
		HN 1/2 (1875)	34
18	653026	HN 3/4	2
20	654006	FW 3/8	24
21	654024	LW 5/16	2
22	654014	FW 3/4	2
23	126803	ROD/GUIDE SHUTTLE (1475)	5
		ROD/GUIDE SHUTTLE (1875)	7
24	126804	GUIDE/BELT ASSY (1475)	1
	126800	GUIDE/BELT ASSY (1875)	1
25	650453	CS 1/2X1-1/2	2
26	654009	FW 1/2	4
27	654030	LW 1/2	4
28	9H300	PIN/CONVEYOR LOCK	2
30	118696	SHAFT/STABILIZER (1475)	1
	118697	SHAFT/STABILIZER (1875)	1
31	117958	SPROCKET/TDC	2
32	057179	BEARING/BALL	2
33	066160	KEY/SQUARE	2
34	H7165	FW 1-17/64 SPECIAL	8
35	070965	SPACER/PICKUP	1
36	119001	GUARD/CHAIN LT	1
37	119002	GUARD/CHAIN RT	1
38	650490	CS 3/8X1	10
39	653010	HN 3/8	14
40	653018	HN 1/2	4
42	654026	LW 3/8	16
43	17H361	FW/WASHER/SAFETY FLANGE	2
44	077526	RETAINER/72 MM BEARING HOUSING	4
45	062342	BOLT 1/2X3-1/2	2
50	098899	CHAIN/ROLLER #60X91 LINKS (1475)	2
	098898	CHAIN/ROLLER #60X107 LINKS (1875)	2
51	070643	LINK/CONNECTOR	4
52	078060	BUSHING/CHAIN	1

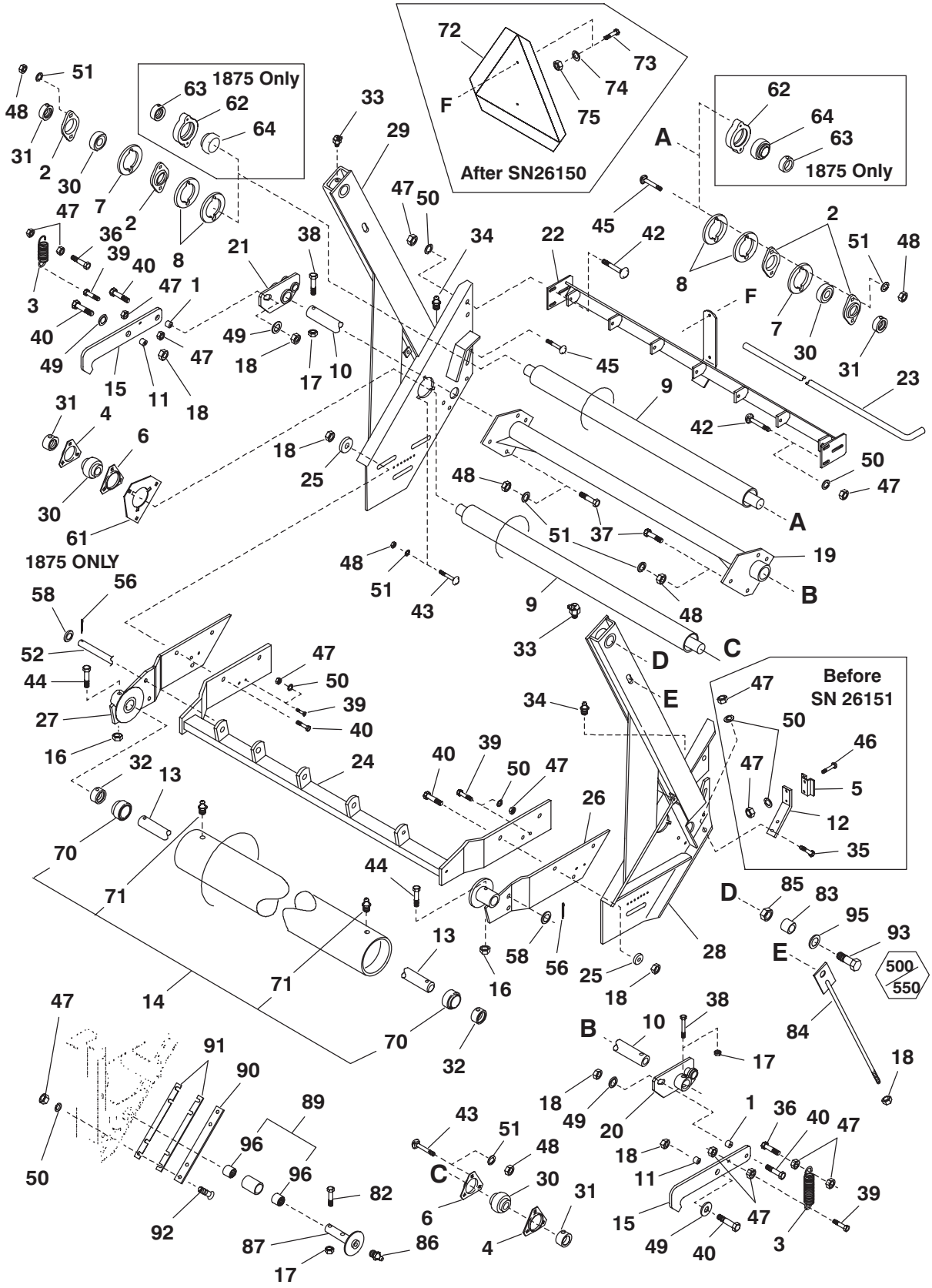
1875 Only
After SN26150
1875 Only
1875 ONLY
Before SN 26151
500
550

Ref. No.	Part No.	Description	Qty. Req.
01	6H130	BEARING/CONVEYOR PIVOT	2
02	H487	RETAINER/BEARING (1475 Only)	4
03	U10014B	SPRING/PAWL	2
04	027003	RETAINER/BEARING	2
05	047269[a]	SOCKET/SIGN MOUNTING	1
06	066309	FLANGETTE/62 MM	2
07	066350	SPACER/BEARING (1475 Only)	2
08	066351	SPACER/BEARING (1475 Only)	4
09	066352	ROLLER/REAR (1475)	2
	127114	ROLLER/REAR (1875)	2
10	066363	TUBE/GATE LOCK PIVOT (1475)	1
	070834	TUBE/GATE LOCK PIVOT (1875)	1
11	066369	BUSHING/GATE LOCK ARM	2
12	066376[a]	BRACKET/SMV EMBLEM	1
13	069789	SHAFT/GATE ROLLER (1475)	1
	070833	SHAFT/GATE ROLLER (1875)	1
14	070470	ROLLER/GATE ASSY (1475)	1
	070645	ROLLER/GATE ASSY (1875)	1
15	070750	ARM/GATE LOCK	2
16	071701	LN 5/16	6
17	071703	LN 3/8	4
18	071706	LN 1/2	12
19	084644	TUBE/TORSION ASSY (1475)	1
	084712	TUBE/TORSION ASSY (1875)	1
20	084648	ARM/TORSION LT ASSY	1
21	084650	ARM/TORSION RT ASSY	1
22	084651	GUIDE/BELT ASSY (1475)	1
	084719	GUIDE/BELT ASSY (1875)	1
23	084655	PIN/BELT GUIDE (1475)	1
	084721	PIN/BELT GUIDE (1875)	1
24	098260	BELT/GUIDE (1475)	1
	126228	BELT/GUIDE (1875)	1
25	062255	FW 17/32	6
26	124109	ARM/GATE ROLLER LT ASSY (1475)	1
	125628	ARM/GATE ROLLER LT ASSY (1875)	1
27	124110	ARM/GATE ROLLER RT ASSY (1475)	1
	125626	ARM/GATE ROLLER RT ASSY (1875)	1
28	125921	GATE/LT ASSY (1475)	1
	125948	GATE/LT ASSY (1875)	1
29	125922	GATE/RT ASSY (1475)	1
	125949	GATE/RT ASSY (1875)	1
30	520065	BEARING/BALL (1475)	4
		BEARING/BALL (1875)	2
31	520085	COLLAR/BEARING (1475)	4
		COLLAR/BEARING (1875)	2
32	520093	COLLAR/BEARING	2
33	570009	FITTING/GREASE	2
34	570014	FITTING/GREASE	2
35	650486	CS 5/16X3/4	2
36	650487	CS 5/16X1	2
37	650490	CS 3/8X1	8
38	650492	CS 3/8X2-1/2	2
39	650545	CS 5/16X1-1/4	4
40	650569	CS 1/2X1-3/4	10
42	650687	CB 5/16X3/4	4
43	650704	CB 3/8X1 (1475)	6
		CB 3/8X1 (1875)	9
44	650784	CS 5/16X2-3/4	2
45	650786	CB 3/8X1-1/4 (1475)	4
	650860	CB 3/8X1-3/4 (1875)	4
46	650949	THMS 5/16X3/4	2
47	653007	HN 5/16	22
48	653010	HN 3/8 (1475)	18
		HN 3/8 (1875)	21
49	654009	FW 1/2 (1475)	4
		FW 1/2 (1875)	10
50	654024	LW 5/16	14
51	654026	LW 3/8 (1475)	18
		LW 3/8 (1875)	21
52	124493	PIN/BELT GUIDE (1475)	1
	126227	PIN/BELT GUIDE (1875)	1
56	650551	CP 3/32X3/4	2
58	654004	FW 5/16	2
61	066183	PLATE (1875 Only)	1
62	046754	HOUSING/BEARING (1875 Only)	2
63	520090	COLLAR/BEARING (1875 Only)	2
64	057179	BEARING/BALL (1875 Only)	2
70	041499	BEARING/BALL	2
71	570019	FITTING/GREASE	2
72	145235[b]	SMV MARKER/MOUNTED	1
73	650448[b]	CS 1/4X3/4	2
74	654002[b]	LW 1/4	2
75	653005[b]	HN 1/4	2
82	650535	CS 3/8X2-1/4	2
83	066377	BUSHING/GATE PIVOT	2
84	066380	ROD/LIFT ASSY (1475)	2
	070835	ROD/LIFT ASSY (1875)	2
85	066777	NILN 1	2
86	570005	FITTING/GREASE	2
87	070754	PIN	2
89	073172	SLEEVE/GATE LATCH ASSY	2
90	094891	STOP/GATE LONG	2
91	094892	SPACER/SHIM	6
92	650370	FHCS 5/16X1	8
93	650914	CS 1X3-3/4	2
95	654016	FW 1	4
96	520139	BEARING/NEEDLE	2

a) Before SN26151-1475 & 18801-1875

b) After SN26150-1475 & 18800-1875

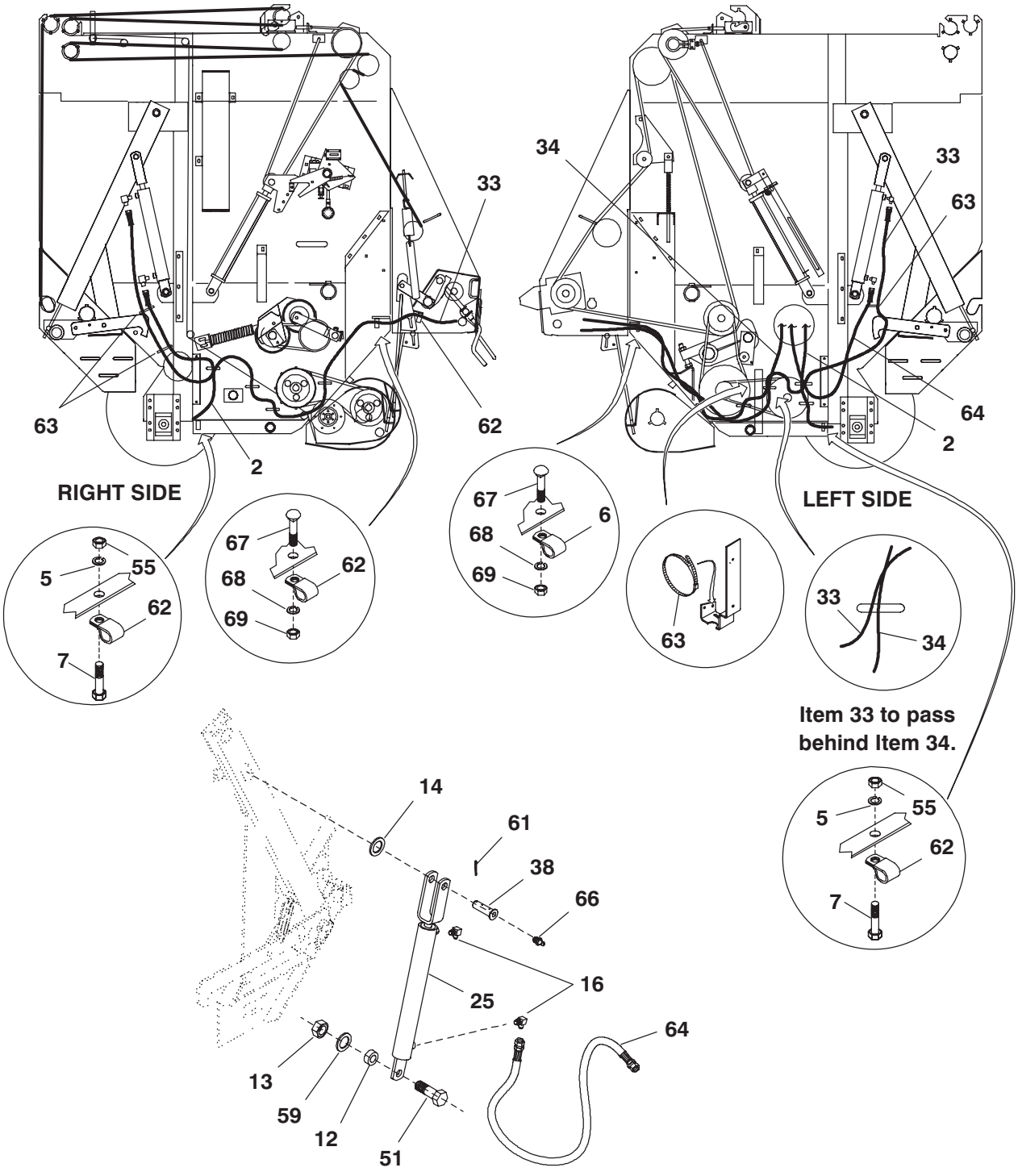
RIGHT SIDE
LEFT SIDE
Item 33 to pass behind Item 34.
63
2
62
33
34
64
67
68
69
6
5
55
7
14
61
38
66
16
25
13
59
12
51

Ref. No.	Part No.	Description	Qty. Req.
02	119355[a]	HOSE/ASSY (1475)	1
	119456[a]	HOSE/ASSY (1875)	1
05	654024	LW 5/16	2
06	097860	CLAMP/HOSE DOUBLE	1
07	650490	CS 3/8X1	2
12	066385	PIVOT/CYLINDER	2
13	066777	NILN 1	2
14	067491	FW 1-1/32 SPECIAL	2
16	068938	ELBOW/HYD FITTING 90°	4
25	087403[b]	CYLINDER/HYDRAULIC 2X15-1/8 (1475)	2
	087402[b]	CYLINDER/HYDRAULIC 2X18-3/4 (1875)	2
33	119575[c]	HOSE/ASSY (1475)	2
	119574[c]	HOSE/ASSY (1875)	2
34	119573[d]	HOSE/ASSY (1475)	1
	119629[d]	HOSE/ASSY (1875)	1
38	125499	PIN/CYLINDER	2
51	650913	CS 1X2-1/2	2
55	653007	HN 5/16	2
59	654016	FW 1	4
61	655022	CP 3/16X1-3/4	2
62	059075	CLAMP/HOSE	4
63	055648	TIE/WIRE	4
64	119354[e]	HOSE/ASSY	1
66	570019	FITTING/GREASE	2
67	650573	CB 5/16X1	2
68	654026	LW 3/8	2
69	653010	HN 3/8	2

a) Right Gate Cylinder Lower Port to Selector Valve Side Port.
b) For Seal Kit, order 066551.
c) Gate Cylinder Upper Port to Upper Fitting on Front of Baler.
d) Selector Valve Lower Port to Lower Fitting on Front of Baler.
e) Left Gate Cylinder Lower Port to Selector Valve Side Port.

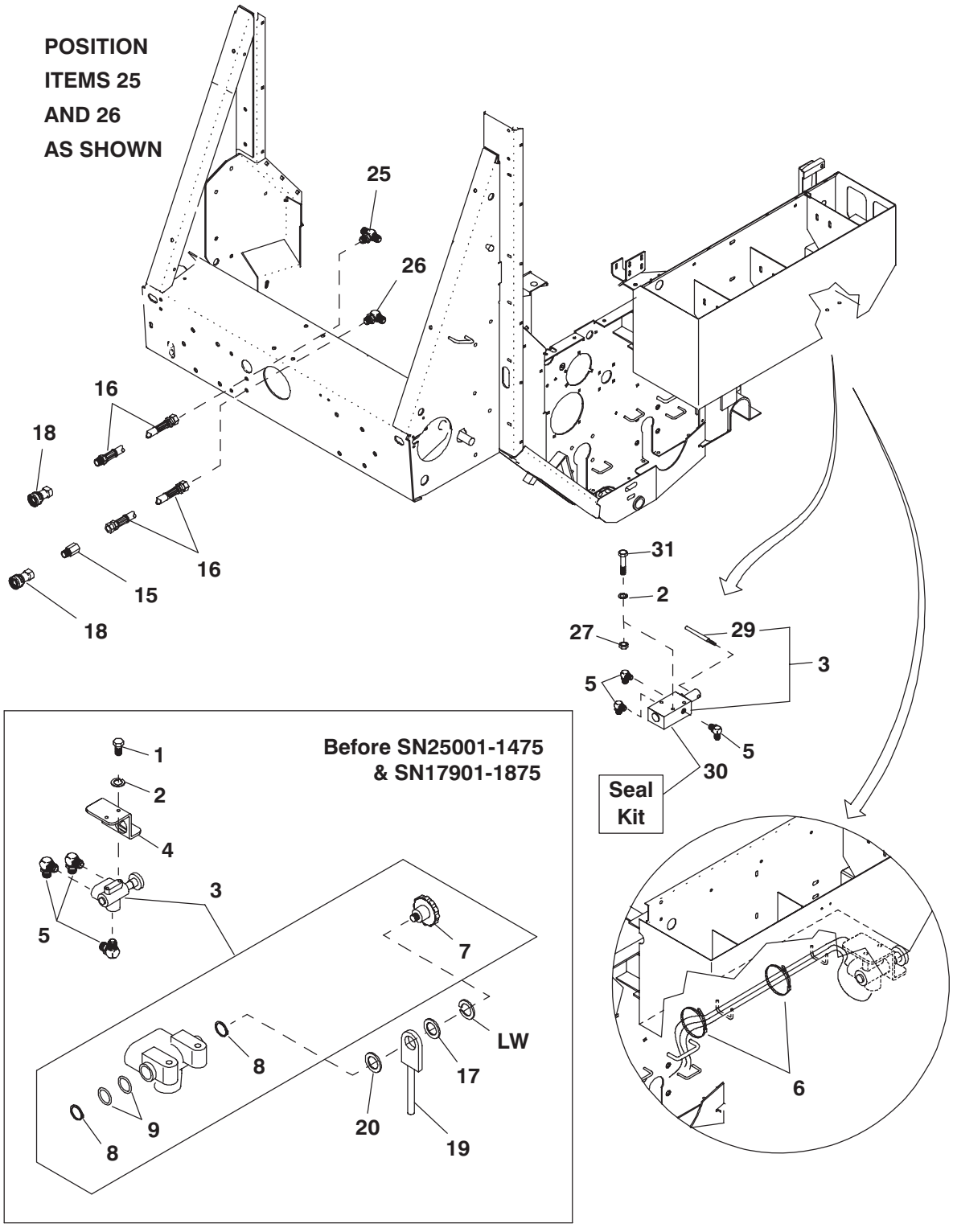
POSITION
ITEMS 25
AND 26
AS SHOWN
25
26
16
18
16
15
18
31
2
27
29
3
5
5
30
Seal
Kit
Before SN25001-1475
& SN17901-1875
1
2
4
3
5
7
LW
8
17
9
8
20
19
6

Ref. No.	Part No.	Description	Qty. Req.
01	650486	CS 5/16X3/4	2
02	654024	LW 5/16	2
03	141492	VALVE/LOCKOUT (AFTER SN25000-1475 & 17900-1875)	1
	119352	VALVE/SELECTOR (BEFORE SN25001-1475 & 17901-1875)	1
04	119609	BRACKET/INDICATOR (BEFORE SN25001-1475 & 17901-1875)	1
05	068938	ELBOW/HYD FITTING 90°	3
06	055648	TIE/WIRE	2
07	119571	KNOB/YELLOW (BEFORE SN25001-1475 & 17901-1875)	1
08	119591	RING/RETAINING	2
09	119592	SEAL/QUAD	2
15	066432	VALVE/HYDRAULIC	1
16	119576	HOSE/ASSY	2
17	654004	FW 5/16	1
18	056080	QUICK-DISCONNECT (MALE)	2
19	119611	INDICATOR/ASSY (BEFORE SN25001-1475 & 17901-1875)	1
20	056937	FW 25/32	1
25	098691	TEE/HYD FITTING	1
26	098534	ELBOW/HYD FITTING 90°	1
27	653007	HN 5/16	2
29	141498	HANDLE	2
30	141497	KIT/SEAL	1
31	650733	CS 5/16X2-1/2	1

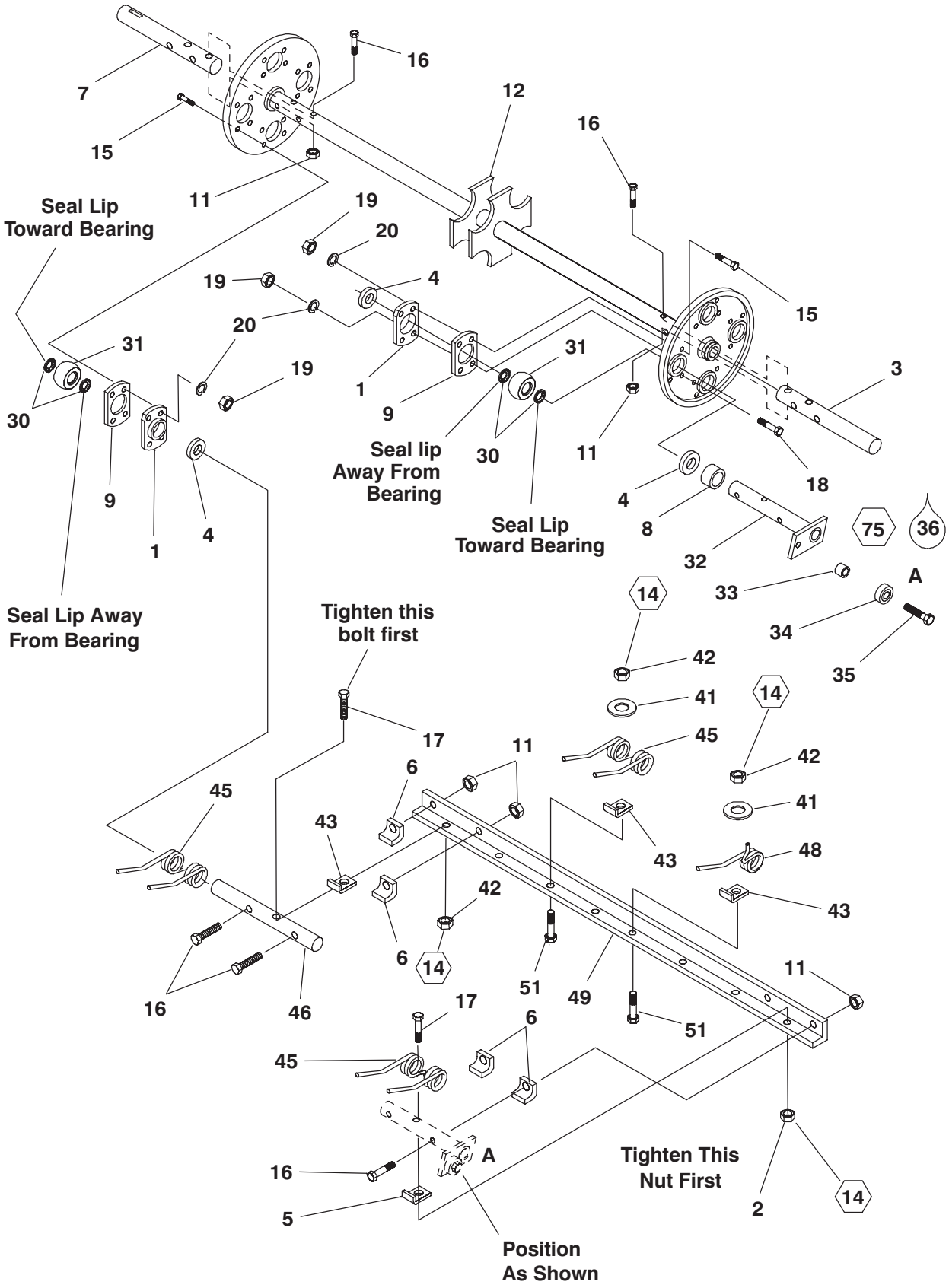
7
16
15
12
16
11
19
20
Seal Lip
Toward Bearing
19
4
15
20
31
19
1
9
31
3
30
Seal lip
Away From
Bearing
30
11
18
4
8
75
36
9
1
4
Seal Lip
Toward Bearing
32
33
A
14
34
Seal Lip Away
From Bearing
Tighten this
bolt first
42
35
41
14
17
45
11
42
6
41
45
43
43
48
42
43
6
14
51
49
11
16
46
17
51
6
45
A
Tighten This
Nut First
16
2
14
5
Position
As Shown

Ref. No.	Part No.	Description	Qty. Req.
01	H7125	RETAINER/BEARING	8
02	064260	NILN 5/16	4
03	066480	SHAFT/PICKUP LT	1
04	066487	FW 1-1/32 SPECIAL	12
05	066492	CLIP/TINE	4
06	071048	SPACER/TINE BAR	16
07	071601	SHAFT/PICKUP RT	1
08	071605	SPACER	4
09	142895	SHIM/FLANGETTE .024	8
11	071703	LN 3/8	24
12	071970	PICKUP/CARRIER ASSY (1475)	1
	071596	PICKUP/CARRIER ASSY (1875)	1
15	650488	CS 3/8X3/4	28
16	650528	CS 3/8X2	24
17	650568	CS 5/16X2	8
18	650965	CS 3/8X1-1/4 GR8	4
19	653010	HN 3/8	32
20	654026	LW 3/8	32
30	041881	SEAL/OIL	16
31	056249	BEARING/SINTERED	8
32	072554	ARM/CAM ASSY	4
33	066489	SPACER/CAM ROLL	4
34	520175	BEARING/BALL	4
35	066490	CS W/NYLON PATCH	4
36		SEALANT WICKING	
41	042135	FW 11/32 SPECIAL (1475)	20
		FW 11/32 SPECIAL (1875)	24
42	064260	NILN 5/16 (1475)	24
		NILN 5/16 (1875)	28
43	066492	CLIP/TINE (1475)	24
		CLIP/TINE (1875)	28
45	071607	TINE/PICKUP (1475)	24
		TINE/PICKUP (1875)	36
46	071609	SHAFT/TINE ANGLE RT	4
48	071939	TINE/PICKUP (1475 Only)	4
49	071969	SUPPORT/TINE (1475)	4
	071608	SUPPORT/TINE (1875)	4
51	650545	CS 5/16X1-1/4 (1475)	20
		CS 5/16X1-1/4 (1875)	24

RB1475/1875 - PICKUP; FRAME, GUIDES & IDLER

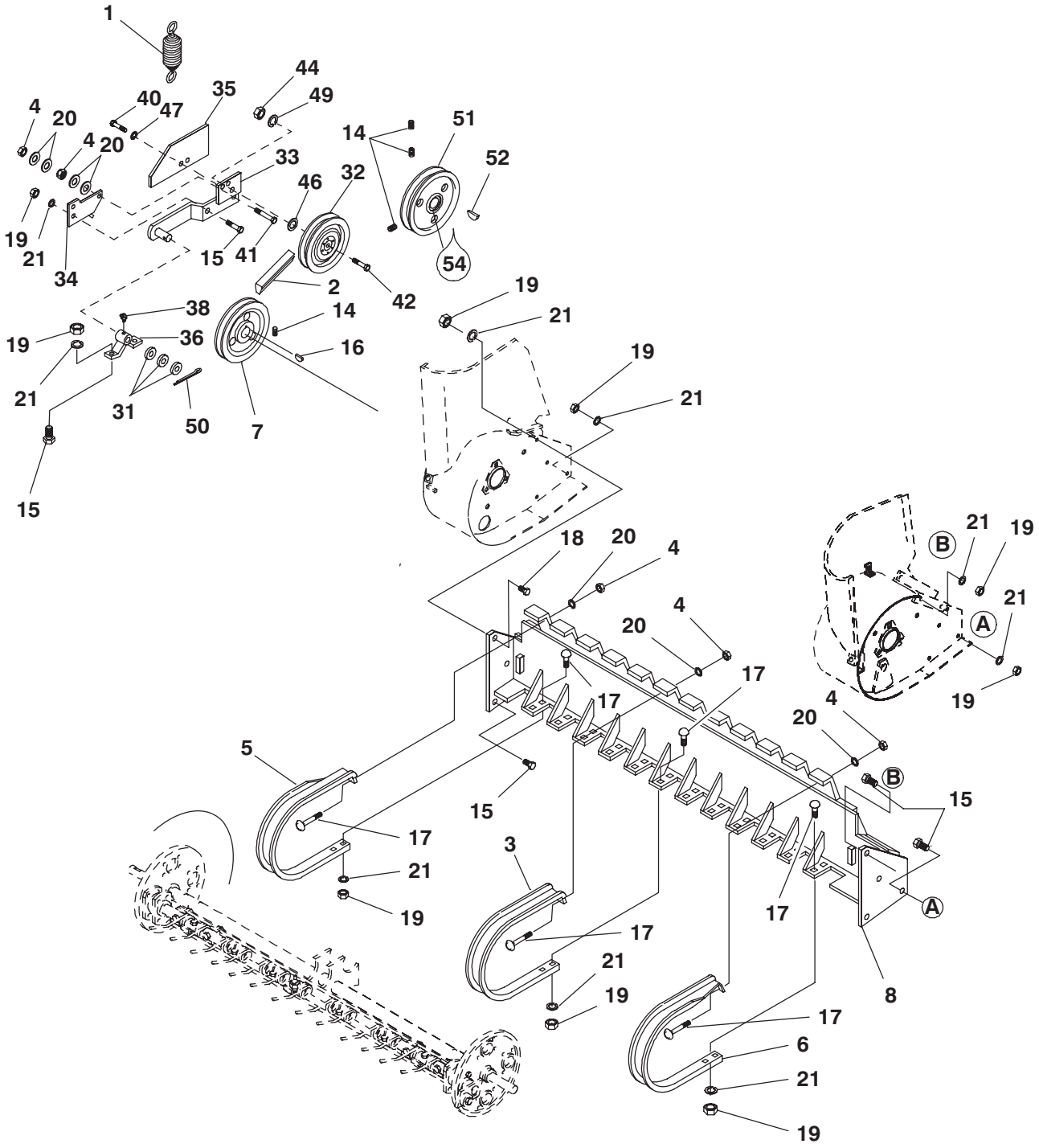

Ref. No.	Part No.	Description	Qty. Req.
01	066531	SPRING/EXTENSION	1
02	067516	V-BELT	1
03	071637	GUIDE/TINE (1475)	10
		GUIDE/TINE (1875)	15
04	071703	LN 3/8 (1475)	14
		LN 3/8 (1875)	21
05	075650	GUIDE/TINE RT	1
06	075651	GUIDE/TINE LT	1
07	066524	SHEAVE/7.625 DIA	1
08	090067	HANGER/STRIPPER (1475)	1
	090667	HANGER/STRIPPER (1875)	1
14	650213	SHSS 3/8X3/8	5
15	650490	CS 3/8X1	10
16	650513	KEY/WOODRUFF 1/4X1	1
17	650790	CB 3/8X3/4 (1475)	36
		CB 3/8X3/4 (1875)	51
18	650954	THMS 3/8X1	1
19	653010	HN 3/8 (1475)	35
		HN 3/8 (1875)	49
20	654006	FW 3/8 (1475)	16
		FW 3/8 (1875)	23
21	654026	LW 3/8 (1475)	35
		LW 3/8 (1875)	49
31	H8354	FW 25/32 SPECIAL	3
32	053688	IDLER/BELT	1
33	066526	ARM/IDLER ASSY	1
34	066528	PLATE/TENSION ASSY	1
35	066532	SHIELD/IDLER	1
36	066533	PIVOT/IDLER ASSY	1
38	570009	FITTING/GREASE	1
40	650542	CS 1/4X1/2	2
41	650579	CS 3/8X1/3/4	1
42	650647	CS 5/8X2	1
44	653021	HN 5/8	1
46	654012	FW 5/8	1
47	654022	LW 1/4	2
49	654032	LW 5/8	1
50	655020	CP 3/16X1-1/2	1
51	071635	SHEAVE/IC 8-1/4	1
52	073846	KEY/WOODRUFF 1/4X1	1

RB1475/1875 - PICKUP, RIGHT HEADER

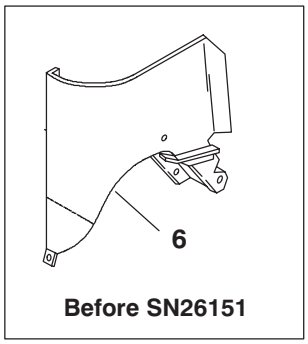

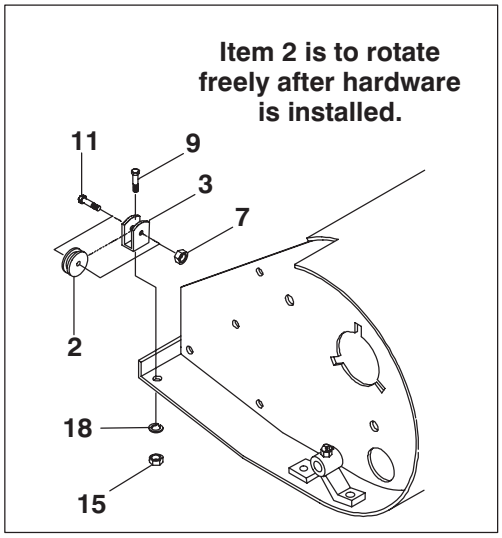

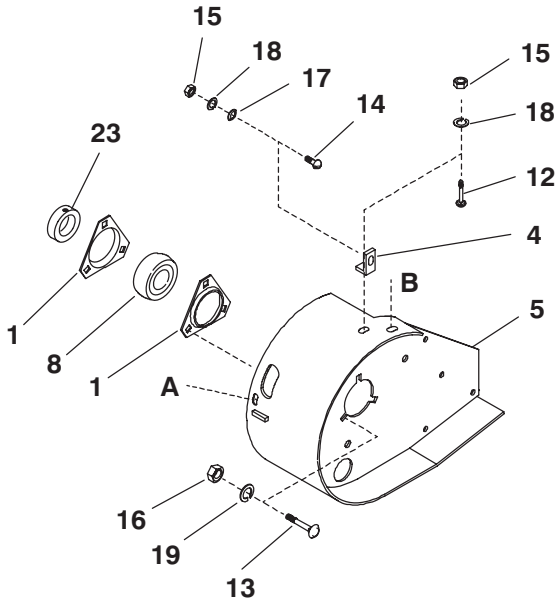

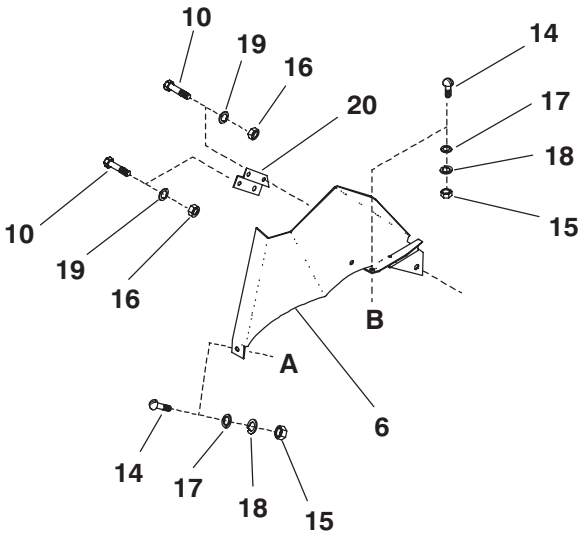

Ref. No.	Part No.	Description	Qty. Req.
01	027003	RETAINER/BEARING	2
02	053900	PULLEY	1
03	056145	BRACKET/PULLEY	1
04	066511	ANGLE	1
05	119327	HEADER/RT ASSY	1
06	142459	CROWDER/RT ASSY (AFTER SN26150-1475 & 18800-1875)	1
	071627	CROWDER/RT ASSY (BEFORE SN26151-1475 & 18801-1875)	1
07	071701	LN 5/16	1
08	520065	BEARING/BALL	1
09	650486	CS 5/16X3/4	1
10	650488	CS 3/8X3/4	4
11	650545	CS 5/16X1-1/4	1
12	650687	CB 5/16X3/4	1
13	650704	CB 3/8X1	3
14	650949	THMS 5/16X3/4	3
15	653007	HN 5/16	5
16	653010	HN 3/8	7
17	654004	FW 5/16	3
18	654024	LW 5/16	5
19	654026	LW 3/8	7
20	142460	BRACKET/RT CROWDER MTG (AFTER SN26150-1475 & 18800-1875)	1
23	520085	BEARING/COLLAR	1

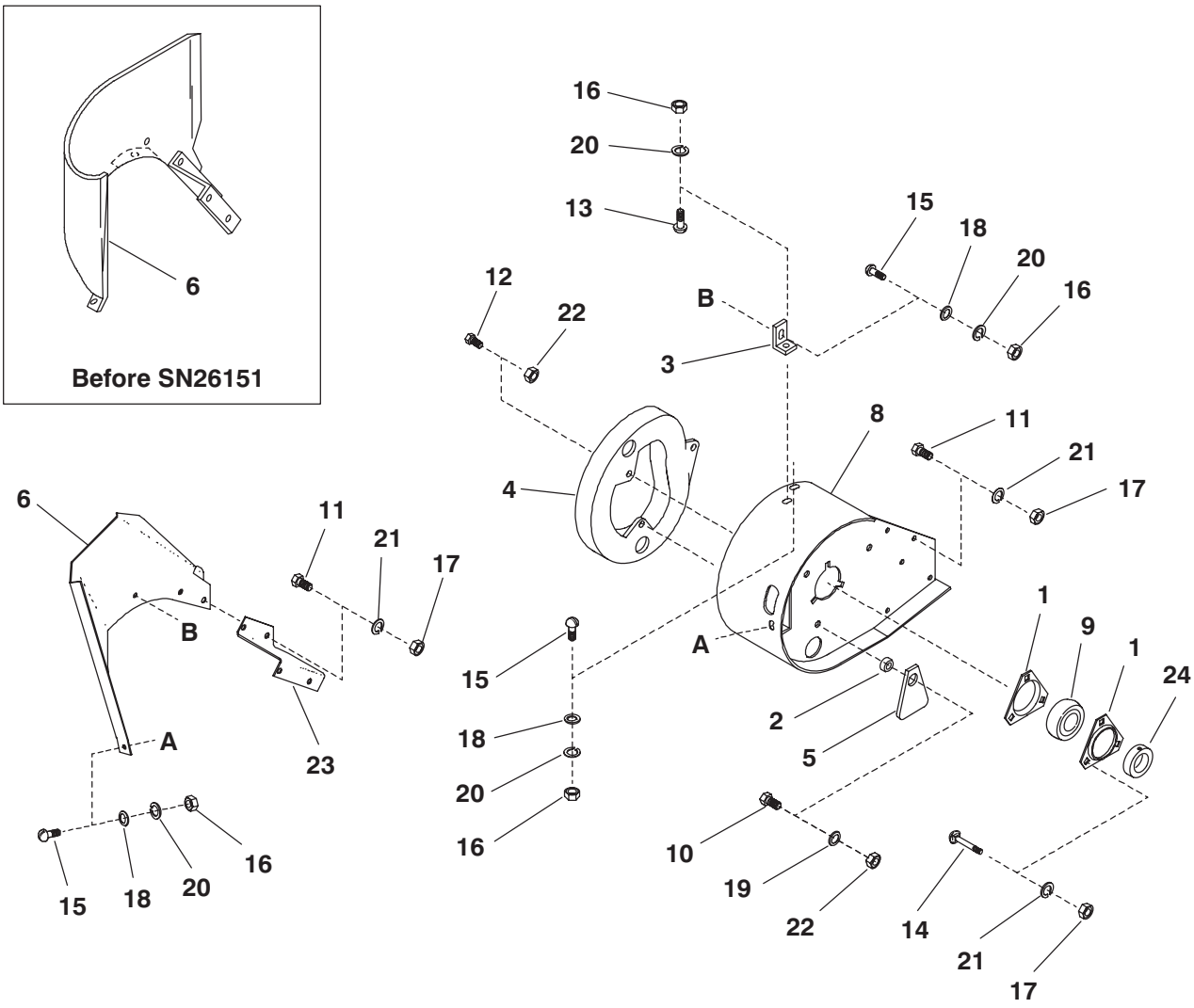

Ref. No.	Part No.	Description	Qty. Req.
01	027003	RETAINER/BEARING	2
02	058807	FW 17/32	1
03	066511	ANGLE	1
04	069531	CAM/PICKUP	1
05	071626	COVER	1
06	142463	CROWDER/LT ASSY (AFTER SN26150-1475 & 18800-1875)	1
	071631	CROWDER/LT ASSY (BEFORE SN26151-1475 & 18801-1875)	1
08	119328	HEADER/LT ASSY	1
09	520065	BEARING/BALL	1
10	650453	CS 1/2X1-1/2	1
11	650488	CS 3/8X3/4	4
12	650495	CS 1/2X1-1/4	2
13	650687	CB 5/16X3/4	1
14	650704	CB 3/8X1	3
15	650949	THMS 5/16X3/4	3
16	653007	HN 5/16	4
17	653010	HN 3/8	7
18	654004	FW 5/16	3
19	654009	FW 1/2	1
20	654024	LW 5/16	4
21	654026	LW 3/8	7
22	068034	NILN 1/2	3
23	142464	BRACKET/LT CROWDER MTG (AFTER SN26150-1475 & 18800-1875)	1
24	520085	BEARING/COLLAR	1

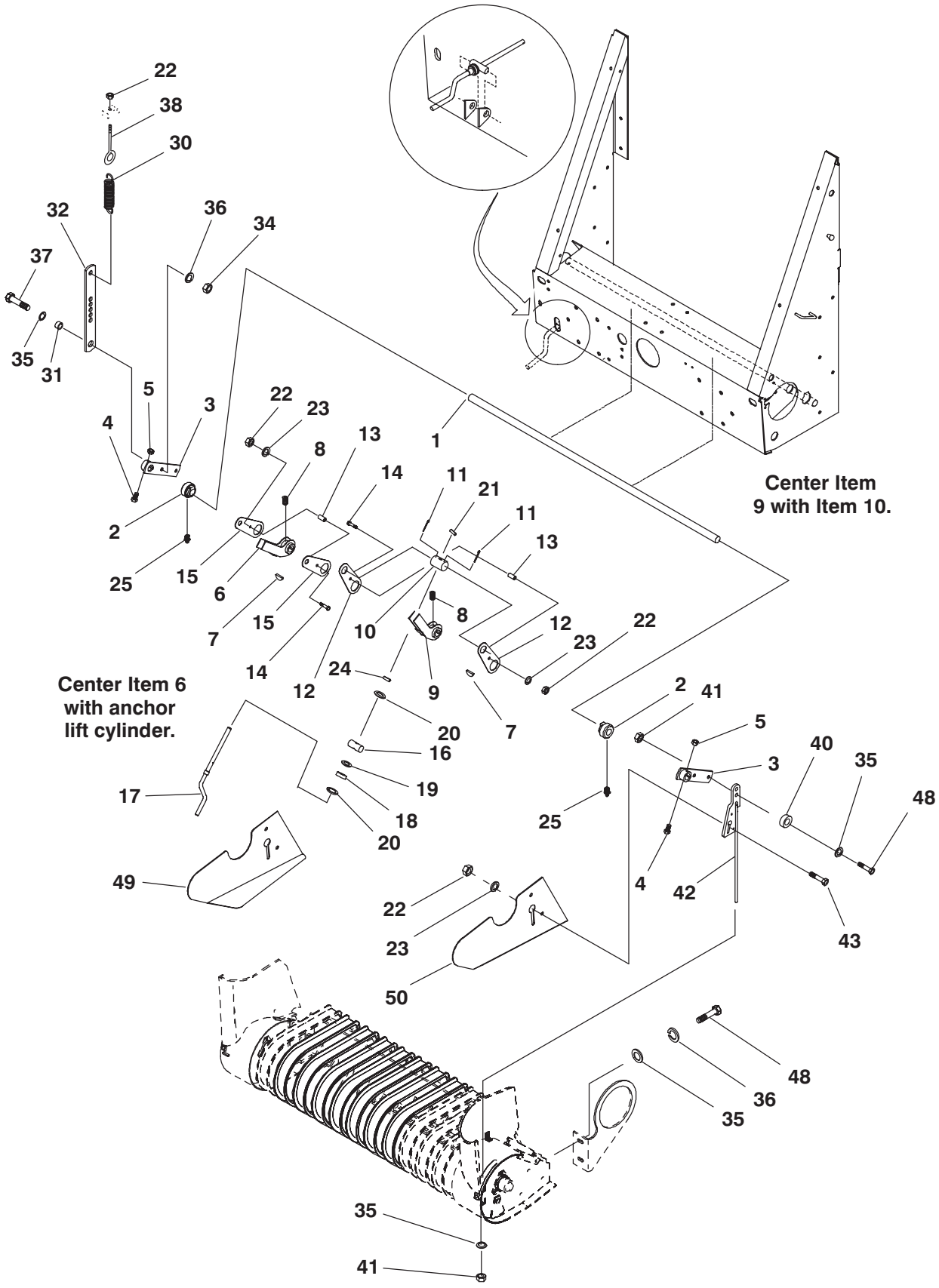
Center Item 9 with Item 10.
Center Item 6 with anchor lift cylinder.

Ref. No.	Part No.	Description	Qty. Req.
01	119207	SHAFT/PICKUP LIFT (1475)	1
	119280	SHAFT/PICKUP LIFT (1875)	1
02	119203	PIVOT	2
03	119204	ARM/ASSY	2
04	650559	CS 5/16X2-1/4	2
05	071701	LN 5/16	2
06	119198	LINK/LIFT HYD ASSY	1
07	650513	KEY/WOODRUFF 1/4X1	2
08	650197	SHSS 1/4X3/8	2
09	119202	LINK/LIFT MANUAL ASSY	1
10	R13018	NUT/LIFT SCREW	1
11	655022	CP 3/16X1-3/4	2
12	119197	LINK/LIFT	2
13	078834	SPACER	2
14	650528	CS 3/8X2	2
15	119199	LINK/LIFT	2
16	119333	PIN/LIFT SCREW	1
17	119472	SCREW/LIFT ASSY	1
18	520007	BEARING/THRUST	1
19	654014	FW 3/4	1
20	B11162	FW 25/32	AR
21	051569	PIN/SPRING	1
22	653010	HN 3/8	8
23	654026	LW 3/8	6
24	050270	PIN/SPRING	1
25	570002	FITTING/GREASE	2
30	066531	SPRING/EXTENSION	1
31	065703	SPACER	1
32	144884	BAR/LIFT	1
34	653018	HN 1/2	1
35	654009	FW 1/2	5
36	654030	LW 1/2	5
37	650453	CS 1/2X1-1/2	1
38	17H281	BOLT/EYE	1
40	065703	SPACER	2
41	071706	LN 1/2	4
42	119216	ROD/LIFT ASSY	2
43	650490	CS 3/8X1	4
48	650495	CS 1/2X1-1/4	6
49	119593	DEFLECTOR/RT	1
50	119594	DEFLECTOR/LT	1

RB1475/1875 - PICKUP, OVERFILL CLUTCH

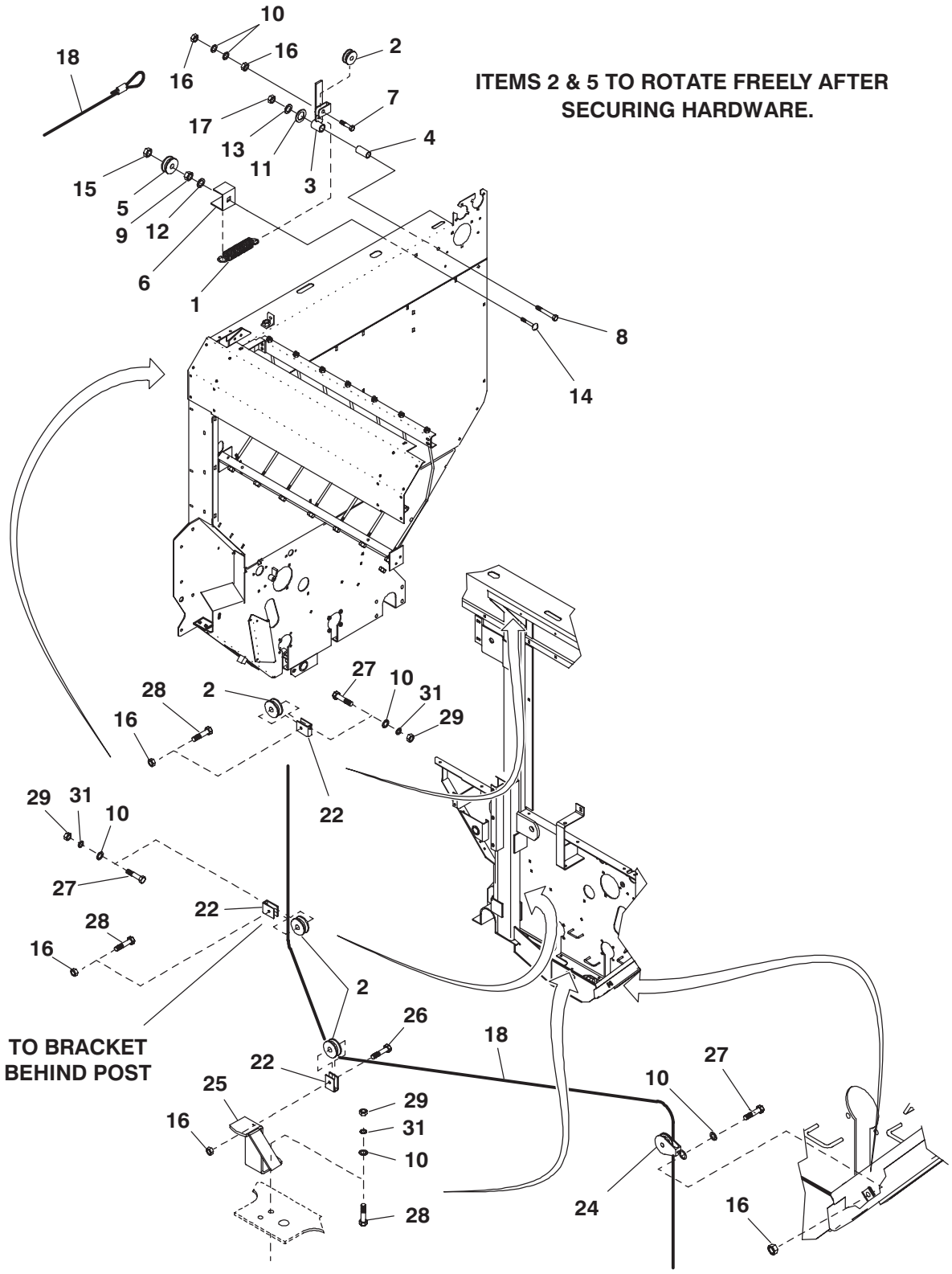

Ref. No.	Part No.	Description	Qty. Req.
01	U10063	SPRING/STOP DOG	1
02	053900	PULLEY	3
03	066537	DECLUTCH ASSY	1
04	066540	SPACER/PIVOT	1
05	066542	PULLEY	1
06	075829	BRACKET/PULLEY	1
07	650568	CS 5/16X2	1
08	650695	CS 5/8X3-1/2	1
09	653044	JN 1/2	1
10	654004	FW 5/16	7
11	654012	FW 5/8	1
12	654030	LW 1/2	1
13	654032	LW 5/8	1
14	078033	CB 1/2X2	1
15	071706	LN 1/2	1
16	071701	LN 5/16	6
17	653021	HN 5/8	1
18	119627	ROPE/WIRE (1475)	1
	119628	ROPE/WIRE (1875)	1
22	056145	BRACKET/PULLEY	3
24	058539	PULLEY	1
25	120474	BRACKET/ASSY (AFTER SN24000-1475 & 17500-1875)	1
	119876	MOUNT/PULLEY (BEFORE SN24001-1475 & 17501-1875)	1
26	650577	CS 5/16X1-1/2	1
27	650487	CS 5/16X1	3
28	650545	CS 5/16X1-1/4	4
29	653007	HN 5/16	4
31	654024	LW 5/16	4

RB1475/1875 - TWINE BOXES
(AFTER SN25000-1475 & SN17900-1875)

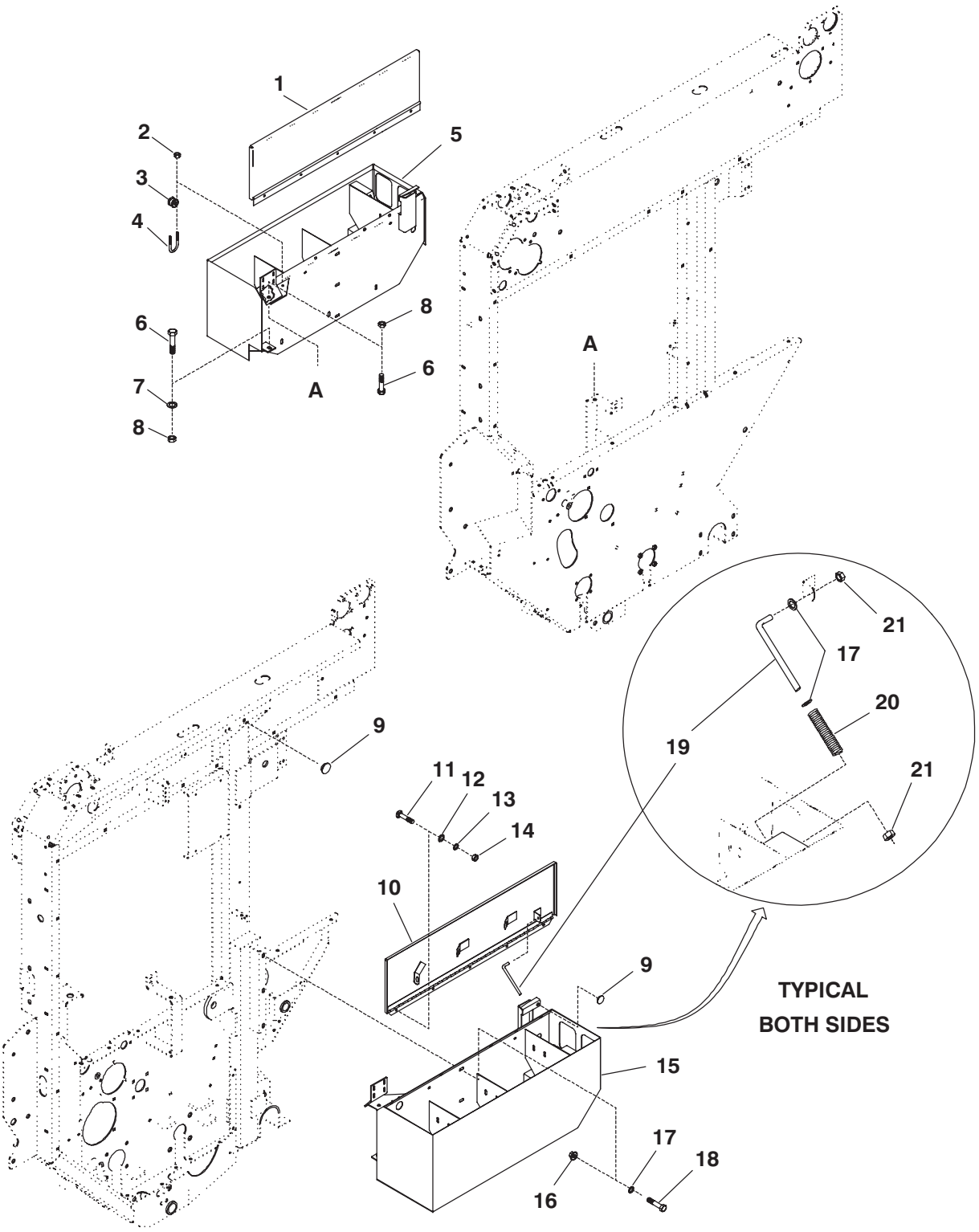

Ref. No.	Part No.	Description	Qty. Req.	Ref. No.	Part No.	Description	Qty. Req.
01	141047	COVER/TWINE BOX RT ASSY	1	14	653005	HN 1/4	20
02	064260	NILN 5/16	8	15	120902	BOX/TWINE LT ASSY	1
03	059721	GUIDE/ROPE	4	16	070856	FLN 3/8	12
04	B11069	U BOLT/ECCENTRIC SHAFT	4	17	654006	FW 3/8	20
05	120907	BOX/TWINE RT ASSY	1	18	650490	CS 3/8X1	12
06	650495	CS 1/2X1-1/4	4	19	141083	ROD/COVER	4
07	654009	FW 1/2	4	20	141519	SPRING/COMPRESSION	4
08	071706	LN 1/2	4	21	067847	NILN 3/8	8
09	420-19509	STOP/RUBBER	4	23	654024	LW 5/16	4
10	141048	COVER/TWINE BOX LT ASSY	1	70	097859	CLAMP/HOSE	4
11	650748	CB 1/4X5/8	20	71	119444	TUBE	2
12	654002	FW 1/4	20	72	653007	HN 5/16	4
13	654022	LW 1/4	20	73	055648	TIE/WIRE	4

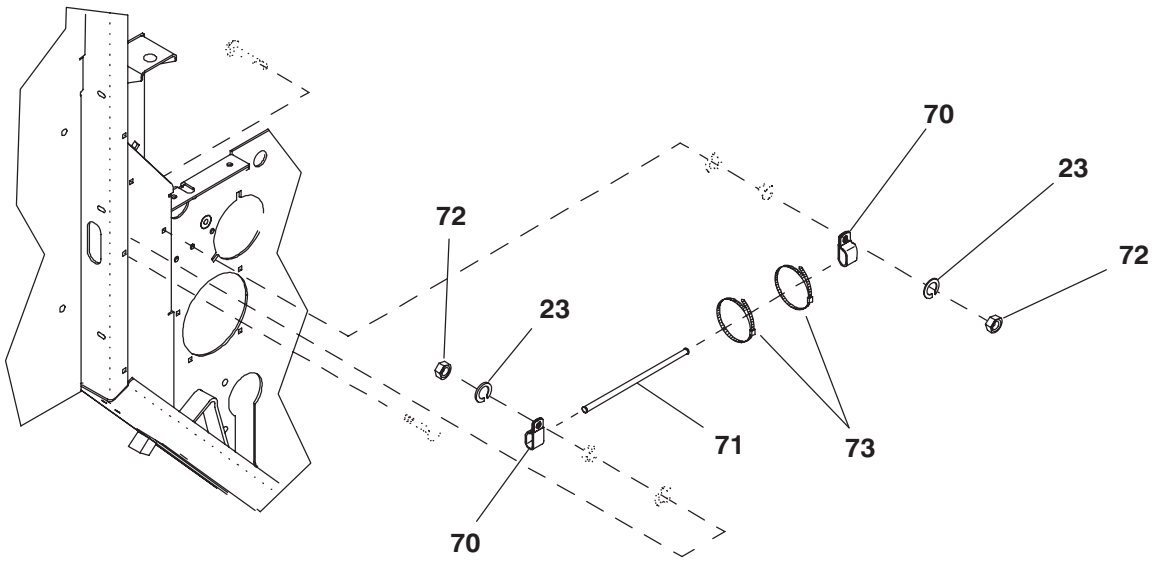

Typical Two Sides

RB1475/1875 - TWINE BOXES
(BEFORE SN25001-1475 & SN17901-1875)

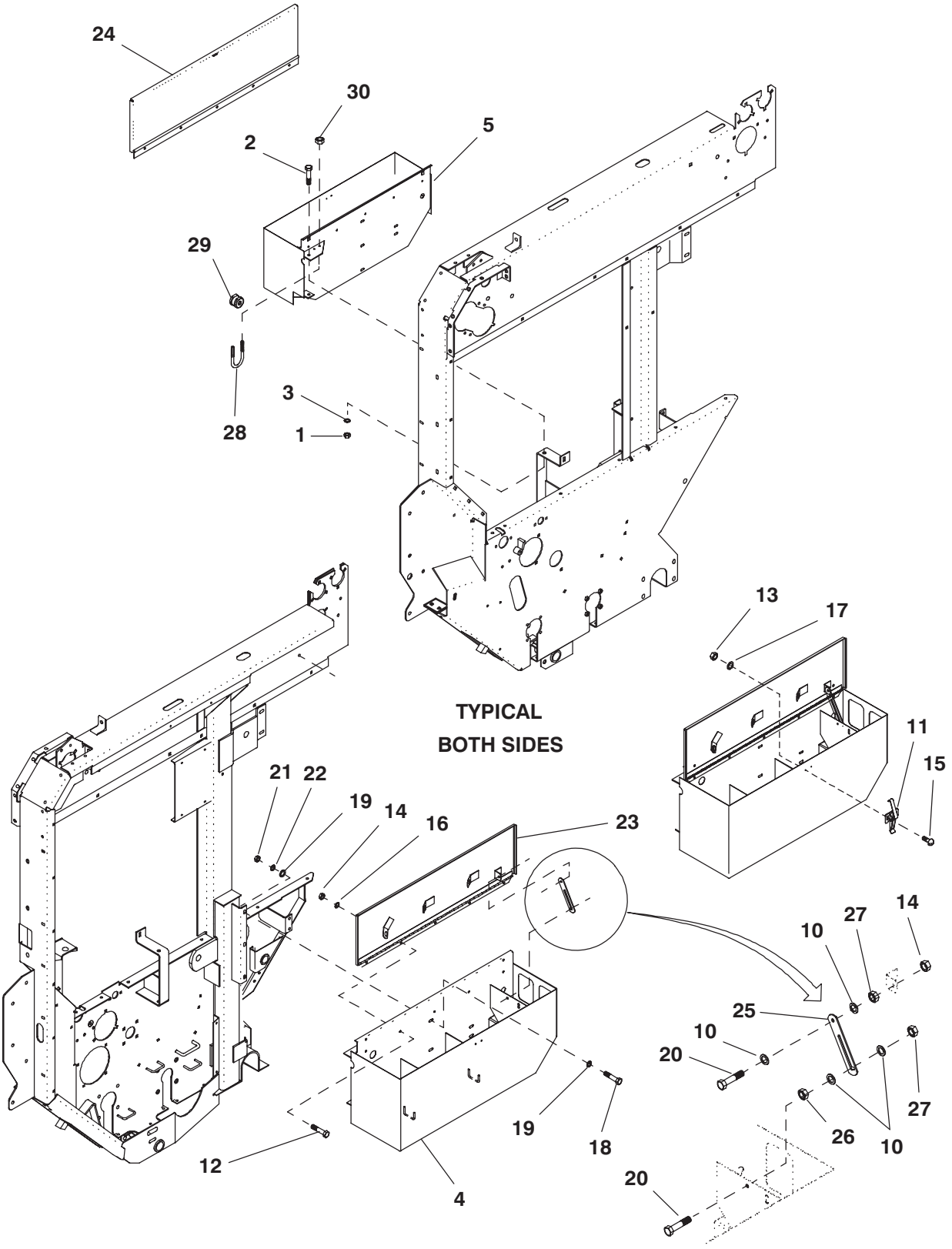

Ref. No.	Part No.	Description	Qty. Req.	Ref. No.	Part No.	Description	Qty. Req.
01	653018	HN 1/2	4	18	650490	CS 3/8X1	10
02	650495	CS 1/2X1-1/4	4	19	654006	FW 3/8	16
03	654030	LW 1/2	4	20	650487	CS 5/16X1	4
04	118666	BOX/TWINE LT ASSY	1	21	653010	HN 3/8	10
05	118708	BOX/TWINE RT ASSY	1	22	654026	LW 3/8	10
10	654004	FW 5/16	8	23	118992	COVER/TWINE BOX LT ASSY	1
11	079878	LATCH	2	24	119014	COVER/TWINE BOX RT ASSY	1
12	650486	CS 5/16X3/4	10	25	119340	LINK	4
13	650627	HN #12-24	4	26	071701	LN 5/16	2
14	653007	HN 5/16	12	27	653034	JN 5/16	4
15	650812	RHMS #12-24X1/2	4	28	B11069	U BOLT/ECCENTRIC SHAFT	2
16	654024	LW 5/16	10	29	059721	GUIDE/ROPE	2
17	650813	LW #12	4	30	064260	NILN 5/16	4

RB1475/1875 - SHIELDS & GUARDS
(AFTER SN25000-1475 & SN17900-1875)

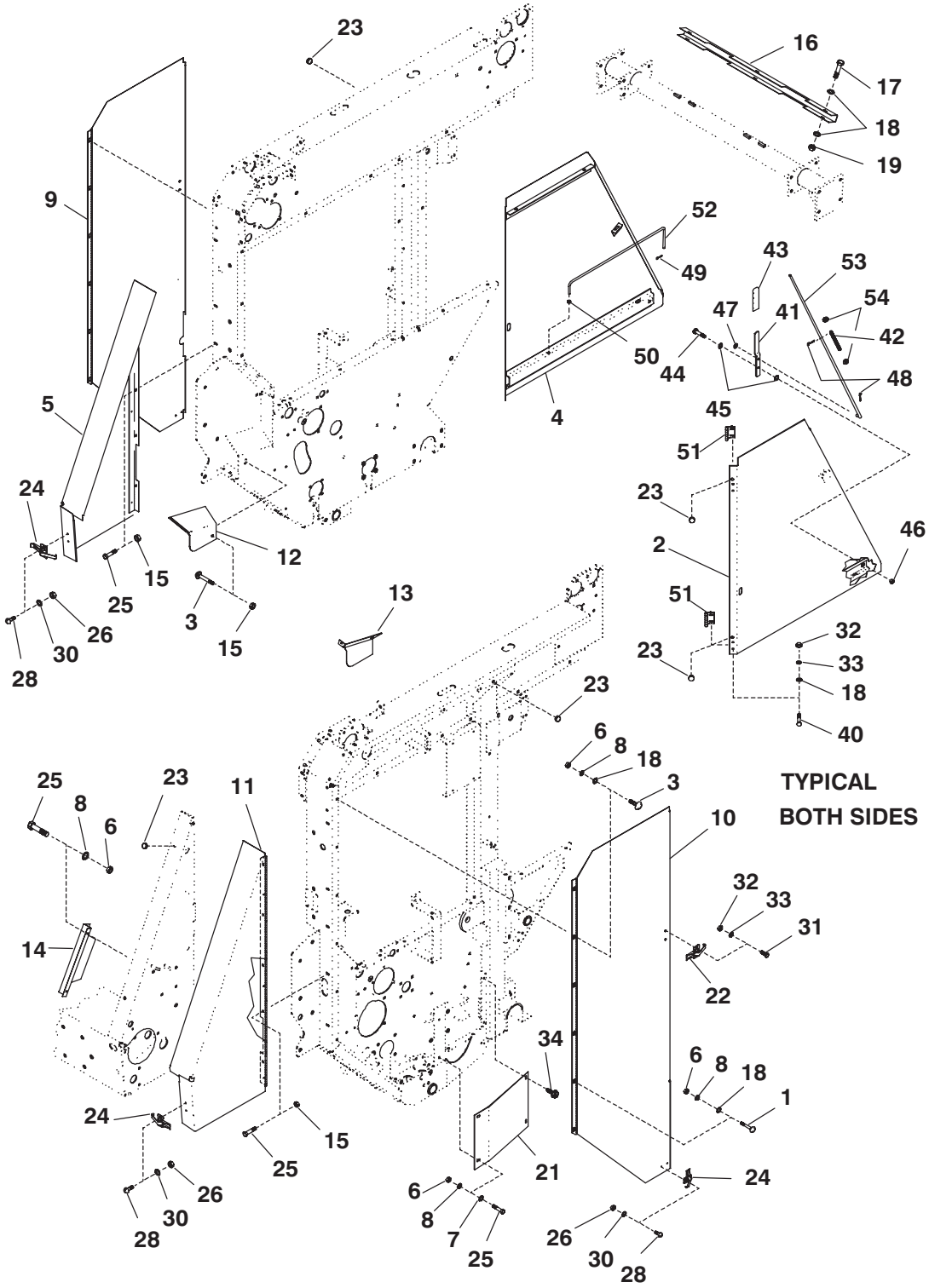

Ref. No.	Part No.	Description	Qty. Req.
01	650781	CB 5/16X1-1/2	4
02	141530	GUARD/LT ASSY (1475)	1
	141490	GUARD/LT ASSY (1875)	1
03	650687	CB 5/16X3/4	14
04	141531	GUARD/RT ASSY (1475)	1
	141491	GUARD/RT ASSY (1875)	1
05	119440[a]	GUARD/FRONT RT ASSY	1
06	653007	HN 5/16 (1475)	19
		HN 5/16 (1875)	20
07	654004	FW 5/16	12
08	654024	LW 5/16	19
09	119428	DOOR/RT ASSY (1475)	1
	119430	DOOR/RT ASSY (1875)	1
10	119376	DOOR/LT ASSY (1475)	1
	119432	DOOR/LT ASSY (1875)	1
11	119439[b]	GUARD/FRONT LT ASSY	1
12	119211	DEFLECTOR/RT	1
13	119212	DEFLECTOR/LT	1
14	119137	CHAIN GUARD	1
15	070648	FLN 5/16	14
16	119370	SHIELD/HOSE (1475)	1
	119371	SHIELD/HOSE (1875)	1
17	650706	CS 1/4X2	3
18	654002	FW 1/4	38
19	071700	LN 1/4	3
21	119060	GUARD/LT	1
22	054586	LATCH	2
23	420-19509	STOP/RUBBER	8
24	079878	LATCH	4
25	650486	CS 5/16X3/4	15
26	650627	HN #12-24	8
28	650812	RHMS #12-24 1/2	8
30	650813	LW #12	8
31	650943	CS 1/4X1/2	4
32	653005	HN 1/4	36
33	654022	LW 1/4	36
34	650985	TCS 5/16X3/4	3
40	650748	CB 1/4X5/8	32
41	141509	HANDLE/LATCH	4
42	005620	SPRING/COMPRESSION	4
43	062282	GRIP	4
44	650487	CS 5/16X1	4
45	065538	FW 11/32	8
46	071701	LN 5/16	4
47	654006	FW 3/8	4
48	650551	CP 3/32X3/4	8
49	650590	CP 1/16X1/2	4
50	073686	GROMMET	4
51	120921	HINGE	8
52	141507	ROD/PROP	4
53	141499	ROD/LATCH (1475)	4
	141508	ROD/LATCH (1875)	4
54	654049	FW 3/8	8

a) Includes Decals 093462.

b) Includes Decals 093373 and 093462.

RB1475/1875 - SHIELDS & GUARDS
(BEFORE SN25001-1475 & SN17901-1875)

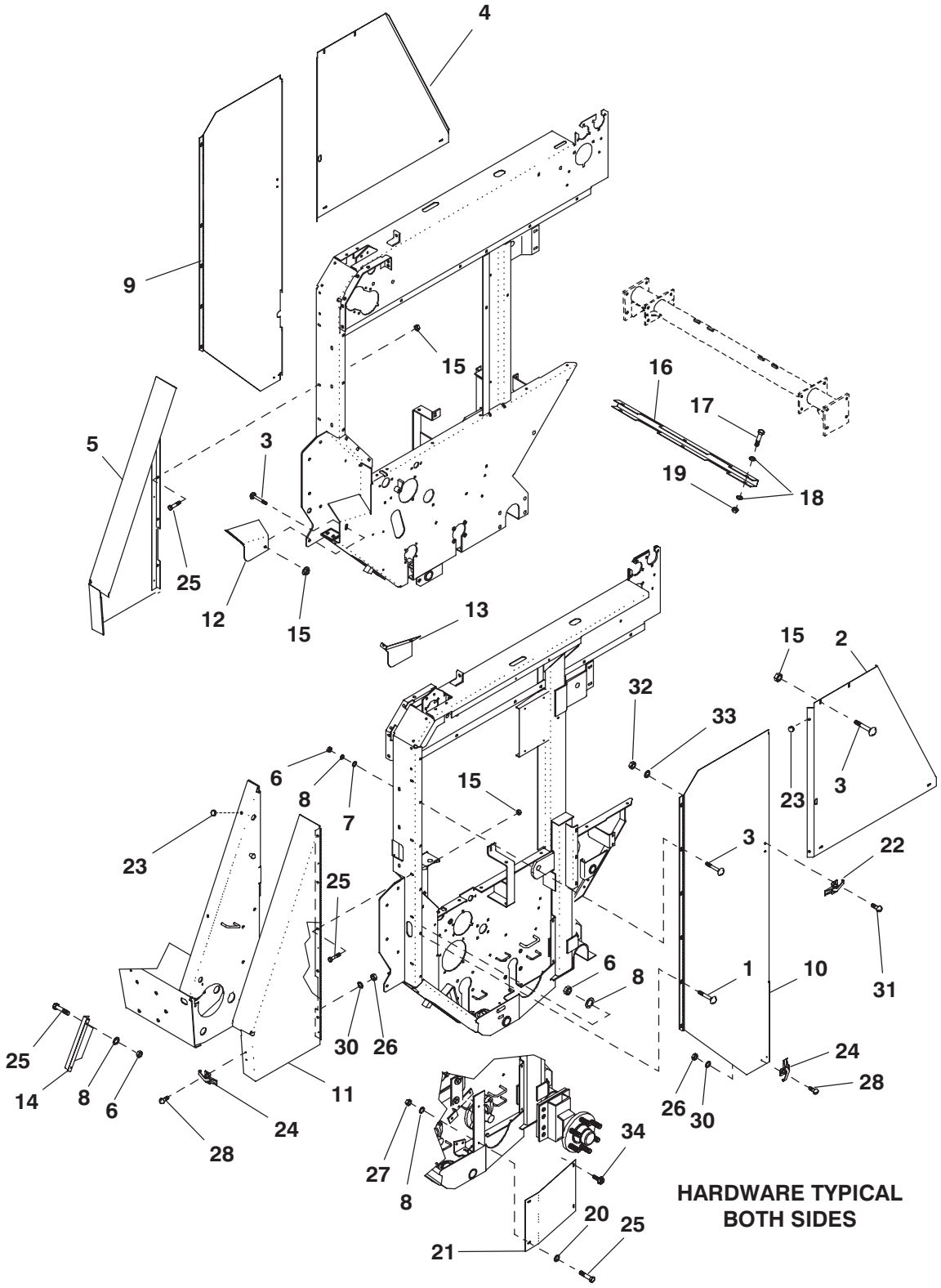

Ref. No.	Part No.	Description	Qty. Req.
01	650781	CB 5/16X1-1/2	4
02	119867	GUARD/LT ASSY (1475)	1
	119869	GUARD/LT ASSY (1875)	1
03	650687	CB 5/16X3/4	22
04	119866	GUARD/RT ASSY (1475)	1
	119868	GUARD/RT ASSY (1875)	1
05	119440[a]	GUARD/FRONT RT ASSY	1
06	653007	HN 5/16 (1475)	18
		HN 5/16 (1875)	20
07	654004	FW 5/16	12
08	654024	LW 5/16	19
09	119428	DOOR/RT ASSY (1475)	1
	119430	DOOR/RT ASSY (1875)	1
10	119376	DOOR/LT ASSY (1475)	1
	119432	DOOR/LT ASSY (1875)	1
11	119439[b]	GUARD/FRONT LT ASSY	1
12	119211	DEFLECTOR/RT	1
13	119212	DEFLECTOR/LT	1
14	119137	GUARD/CHAIN	1
15	070648	FLN 5/16	22
16	119370	SHIELD/HOSE (1475)	1
	119371	SHIELD/HOSE (1875)	1
17	650419	CS 1/4X1-3/4	3
18	654002	FW 1/4	6
19	071700	LN 1/4	3
20	654004	FW 5/16	1
21	119060	GUARD/LT	1
22	054586	LATCH	2
23	420-19509	STOP/RUBBER	8
24	079878	LATCH	4
25	650486	CS 5/16X3/4	15
26	650627	HN #12-24	8
27	653007	HN 5/16	1
28	650812	RHMS #12-24X1/2	8
30	650813	LW #12	8
31	650943	CS 1/4X1/2	4
32	653005	HN 1/4	4
33	654022	LW 1/4	4
34	650985	TCS 5/16X3/4	3

a) Includes Decals 093462.

b) Includes Decals 093373 and 093462.

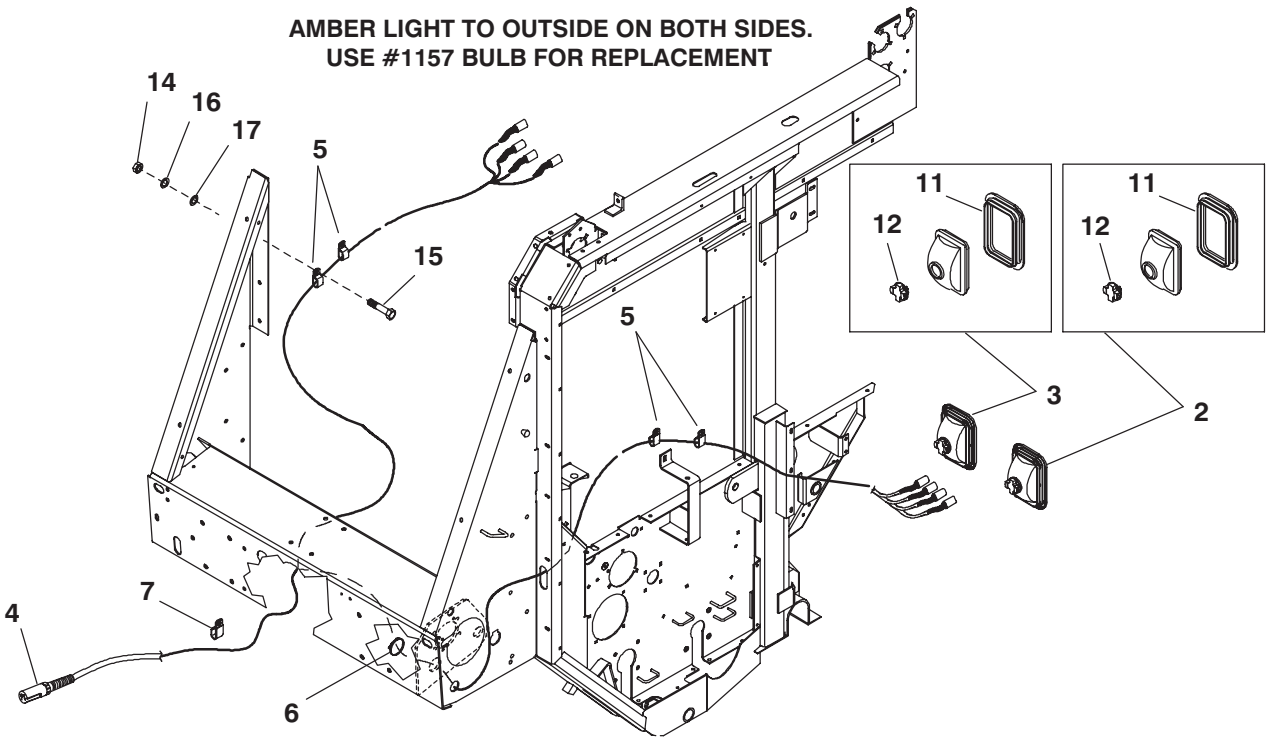

Tail Light / Harness Connections:

- **Green to Amber Light (Right side of Baler)**
- **White to Amber Light & Red Light (Both sides of Baler)**
- **Brown to Red Light (Both sides of Baler)**
- **Yellow to Amber Light (Left Side of Baler)**

Ref. No.	Part No.	Description	Qty. Req.
02	119665	LIGHT/AMBER ASSY	2
03	119666	LIGHT RED ASSY	2
04	119460[a]	HARNESS/LIGHTS	1
05	076078	CLAMP	4
06	055648	TIE/WIRE	1
07	059075	CLAMP/HOSE	1
11	119532	BEZEL/WARNING LIGHT	4
12	119533	SOCKET/WARNING LIGHT	4
14	653005	HN 1/4	4
15	650748	CB 1/4X5/8	4
16	654022	LW 1/4	4
17	654002	FW 1/4	4

a) For repair of 7 Prong Plug with Cable Protector, order 112917.

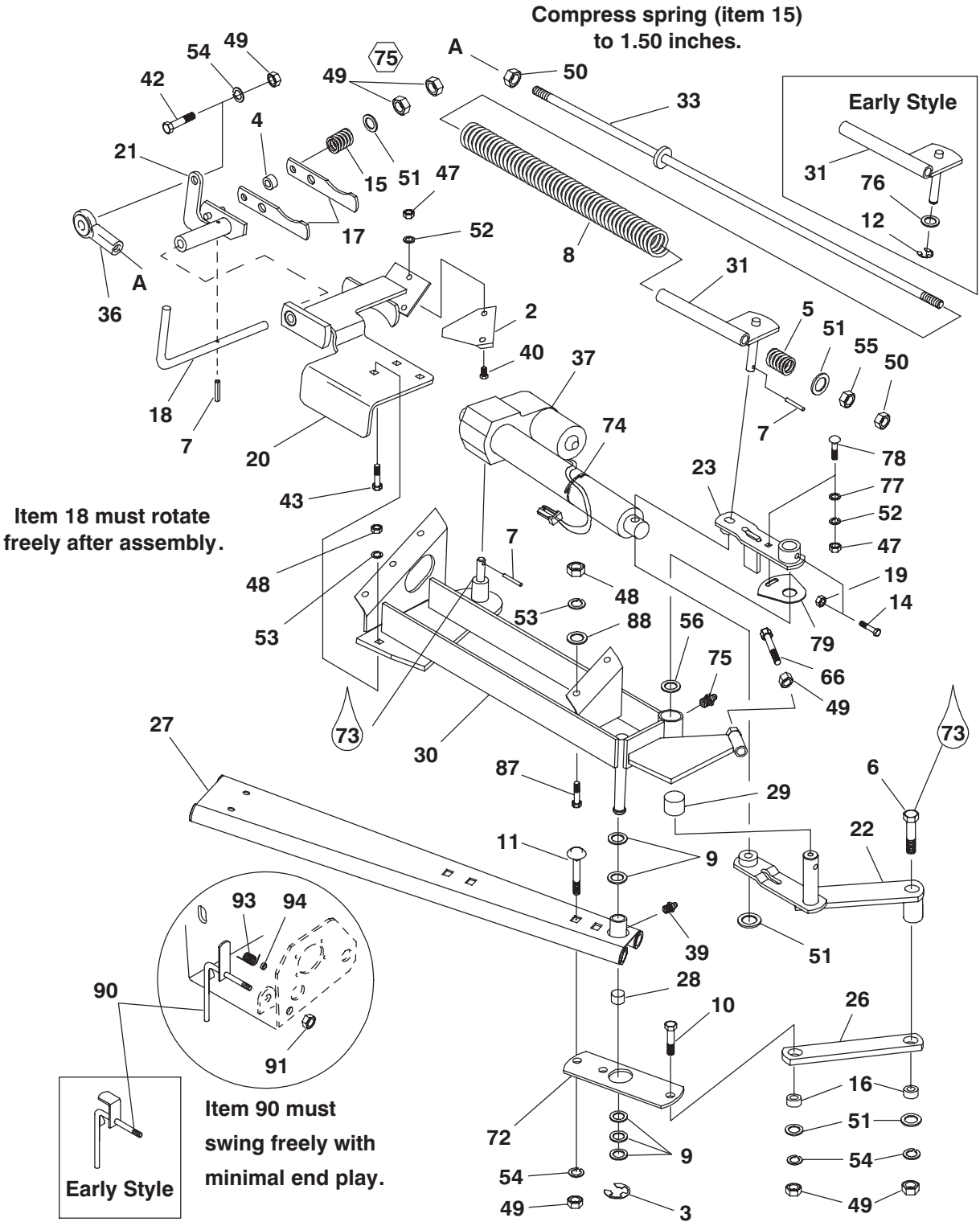
Compress spring (item 15)
to 1.50 inches.
Early Style
Item 18 must rotate
freely after assembly.
Item 90 must
swing freely with
minimal end play.
Early Style

Ref. No.	Part No.	Description	Qty. Req.
02	340-10351	SECTION/SICKLE	1
03	350-32366	KLIPRING 3/4	1
04	3E123	BUSHING/PIVOT	1
05	H8049	SPRING/STALK GUIDE	1
06	650454	CS 1/2X3-3/4	1
07	050270	PIN/SPRING	3
08	053696	SPRING/COMPRESSION	1
09	056937	FW 25/32	5
10	650453	CS 1/2X1-1/2	1
11	650740	CB 1/2X2-1/4	2
12	067416	RING/RETAINER (BEFORE SN24001-1475 & 17501-1875)	1
14	650568	CS 5/16X2	1
15	074023	SPRING/COMPRESSION	1
16	084624	BEARING/STARTER	2
17	097938	PLATE/CUTOFF MOVING	2
18	097947	ROD	1
19	071701	LN 5/16	1
20	119175	FRAME/CUTOFF ASSY	1
21	119329	TRIP/ASSY	1
22	120497	PIVOT ASSY (AFTER SN24000-1475 & 17500-1875)	1
	119343	PIVOT ASSY (BEFORE SN24001-1475 & 17501-1875)	1
23	119057	ARM ASSY/ACTUATOR	1
26	119364	BAR/PUSHER	1
27	119635	ARM/TWINE ASSY	1
28	068071	BEARING/SINTERED	2
29	040183	BUSHING/BRONZE	2
30	120499	FRAME ASSY/TWINE TIE (AFTER SN24000-1475 & 17500-1875)	1
	119177	FRAME ASSY/TWINE TIE (BEFORE SN24001-1475 & 17501-1875)	1
31	120496	SPRING/SLIDE ASSY (AFTER SN24000-1475 & 17500-1875)	1
	119139	SPRING/SLIDE ASSY (BEFORE SN24001-1475 & 17501-1875)	1
33	118662	ROD/ASSY	1
36	125214	ROD/END 1/2	1
37	120509[a]	ACTUATOR (AFTER SN24000-1475 & ALL 1875)	1
	126236[a]	ACTUATOR (BEFORE SN24001-1475 ONLY)	1
39	570019	FITTING/GREASE	1
40	650486	CS 5/16X3/4	2
42	650569	CS 1/2X1-3/4	1
43	650704	CB 3/8X1	3
47	653007	HN 5/16	3
48	653010	HN 3/8	7
49	653018	HN 1/2	8
50	653045	JN 1/2	2
51	654009	FW 1/2	5
52	654024	LW 5/16	3
53	654026	LW 3/8	7
54	654030	LW 1/2	5
55	653019	HN 1/2	1
56	H7126	FW 1-1/32	AR
66	062342	BOLT 1/2X3-1/2	1
72	119062	EXTENSION/TWINE ARM	1
73		COMPOUND/ANTI-SEIZE LUBRICANT	
74	074091	TIE/NYLON	1
75	570009	FITTING/GREASE	1
76	058138	FW 17/32 SPECIAL (BEFORE SN24001-1475 & 17501-1875)	1
77	654004	FW 5/16	1
78	650687	CB 5/16X3/4	1
79	119904	CAM/PAUSE SWITCH (AFTER SN25000-1475 & 18200-1875)	1
87	650491	CS 3/8X1-1/4	4
88	654006	FW 3/8	2
90	119885	TRIP/ASSY (AFTER SN24000-1475 & 17500-1875)	1
	119065	TRIP/ASSY (BEFORE SN24001-1475 & 17501-1875)	1
91	071703	LN 3/8	1
93	119887	SPRING/TORSION	1
94	M12070	SPACER	1

a) For individual parts see page titled Actuator.

RB1475/1875 - AUTOMATIC BALE CONTROL (AFTER SN25000-1475 & SN17900-1875)

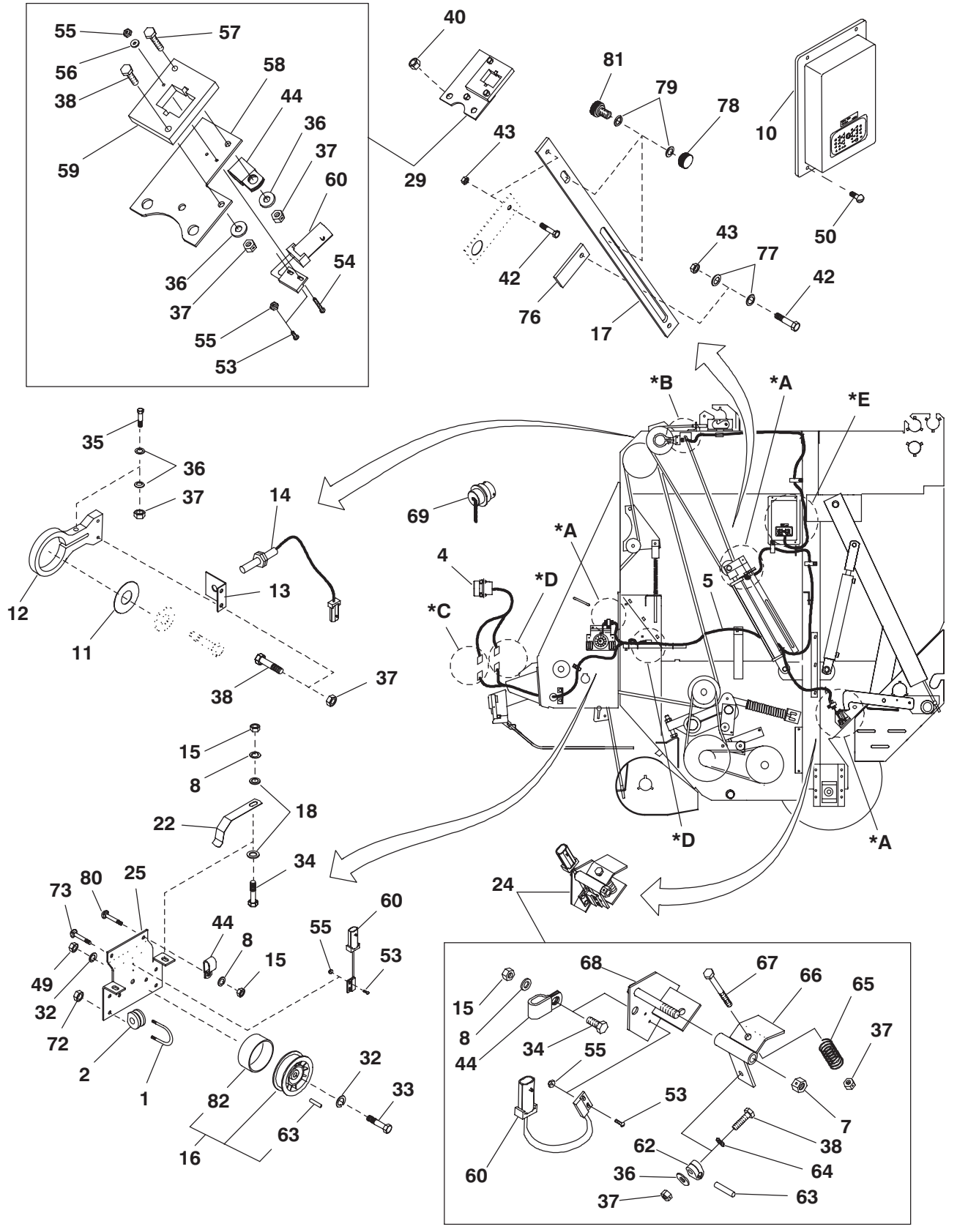

Ref. No.	Part No.	Description	Qty. Req.
01	B11069	U BOLT/ECCENTRIC SHAFT	4
02	059721	GUIDE/ROPE	4
04	119891ac	HARNESS/IMPLEMENT (AFTER SN24000-1475 & 17500-1875)	1
05	141465a	HARNESS/IMPLEMENT	1
08	654024	LW 5/16	9
10	141521	IMPLEMENT MODULE	1
11	112812	WASHER	1
12	117959	BLOCK/FRICTION	1
13	117960	PLATE	1
14	141074a	SENSOR/PROXIMITY	1
15	653007	HN 5/16	9
16	118166	IDLER ASSY	2
17	141229	SLIDE	1
18	654004	FW 5/16	8
22	119133	SPRING	2
24	NSb	SWITCH /TAILGATE ASSY	2
25	141710	SWITCH/TWINE WHEEL ASSY	2
29	NSb	SWITCH/SHUTTLE RETURN ASSY	1
32	654026	LW 3/8	3
33	650491	CS 3/8X1-1/4	2
34	650486	CS 5/16X3/4	5
35	650419	CS 1/4X1-3/4	2
36	654002	FW 1/4	5
37	071700	LN 1/4	6
38	650835	CS 1/4X1	4
40	653018	HN 1/2	2
42	650490	CS 3/8X1	2
43	071703	LN 3/8	3
44	059075	CLAMP/HOSE	3
49	653010	HN 3/8	1
50	650315	TCS 1/4X1/2	4
53	651212	RHMS #5-40X1/2	5
54	651346	RHMS #5-40X1	3
55	651328	NILN #5-40	6
56	650848	FW #6 WIDE	1
57	650426	CS 1/4X1-1/4	1
58	141072	MOUNT/SLIDE	1
59	141071	SUPPORT/SLIDE	1
60	112423a	SWITCH	4
62	120473	CLAMP	1
63	117995	MAGNET	2
64	651157	LW ET 1/4	1
65	380-13297	SPRING	1
66	120490	ACTUATOR	1
67	650958	CS 1/4X2-3/4	1
68	120492	BRACKET	1
69	119900	DUST CAP/IMPLEMENT HARNESS	1
72	064260	NILN 5/16	8
73	650687	CB 5/16X3/4	4
76	141525	DAMPENER	1
77	654006	FW 3/8	2
78	141077	NUT/MAGNET	2
79	141526	WASHER/NYLON 1/2	4
80	650573	CB 5/16X1	2
81	141082	MAGNET	2
82	118169	RUBBER	1

a) For repair, order the following connector kit numbers:
(Refer to connector locations on previous page)
***A – 119923**
***B – 119924**
***C – 119925 (Blue & Yellow Wires)**
***D – 119927 (Black & Red Wires)**
***E – 119929**

b) Not available as a service part. Refer to the included Parts Breakdown.

c) For repair of (Metal) Connector, see page entitled Service Kits – Electrical Connectors.

RB1475/1875 - AUTOMATIC BALE CONTROL (BEFORE SN25001-1475 & SN17901-1875)

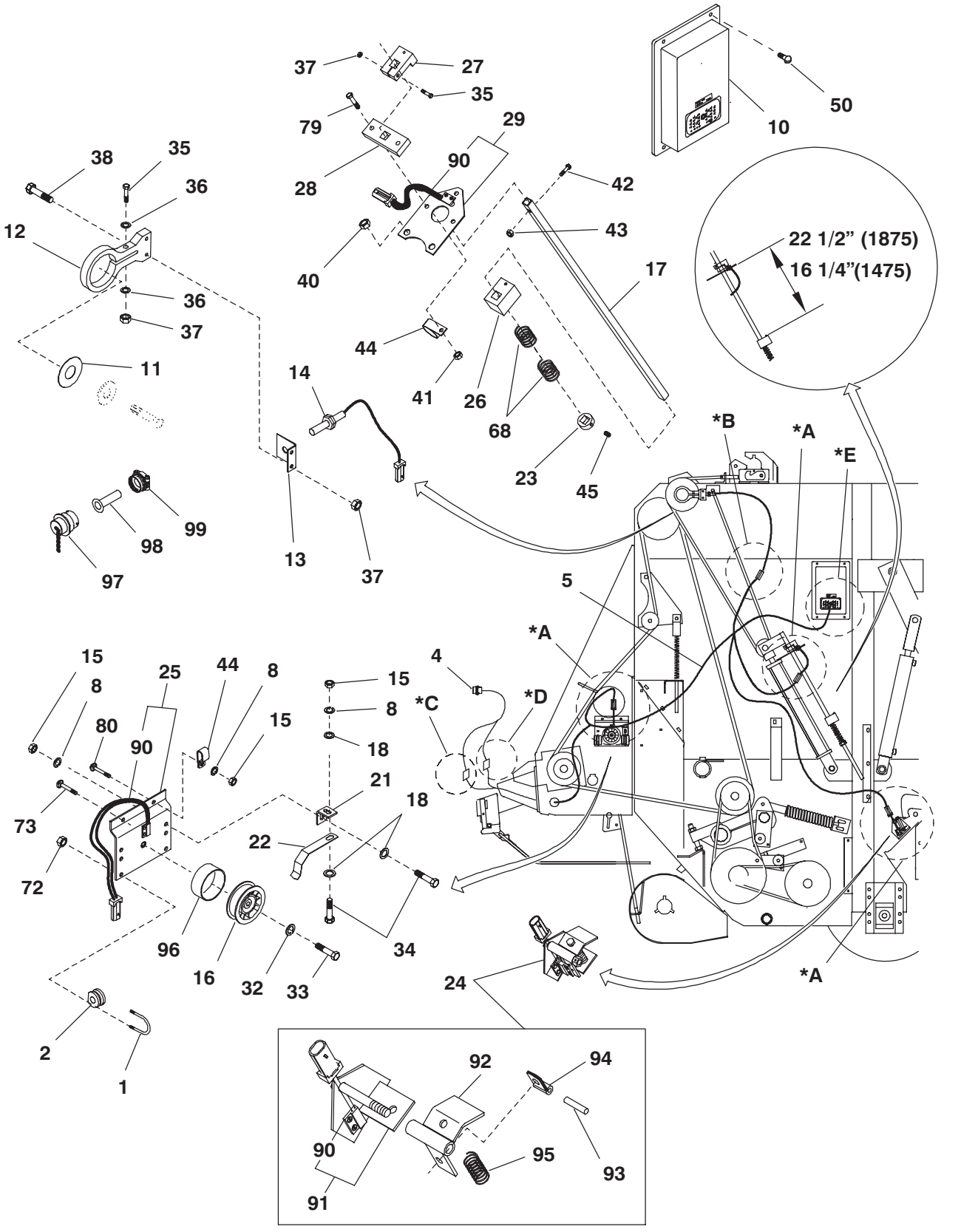

RB1475/1875 - AUTOMATIC BALE CONTROL (BEFORE SN25001-1475 & SN17901-1875)

Ref. No.	Part No.	Description	Qty. Req.
01	B11069	U BOLT/ECCENTRIC SHAFT	4
02	059721	GUIDE/ROPE	4
04	119891ad	HARNESS/IMPLEMENT (INCL 97-99) (AFTER SN24000-1475 & 17500-1875)	1
	112287b	HARNESS/IMPLEMENT (BEFORE SN24001-1475 & 17501-1875)	1
05	141465a	HARNESS/IMPLEMENT	1
08	654024d	LW 5/16	11
10	141521	MODULE/IMPLEMENT	1
11	112812	WASHER	1
12	117959	BLOCK/FRICTION	1
13	117960	PLATE	1
14	117961a	SENSOR/PROXIMITY	1
15	653007	HN 5/16	10
16	118166	IDLER ASSY	2
17	118506	TUBE/SWITCH (1475)	1
	119123	TUBE/SWITCH (1875)	1
18	654004	FW 5/16	7
21	119132	BRACKET	2
22	119133	SPRING	2
23	119191	COLLAR/SET	1
24	NSc	SWITCH/TAILGATE ASSY	2
25	119315	SWITCH/TWINE WHEEL ASSY	2
26	119344	SPACER/MAGNET ASSY	1
27	119345	CLAMP/MAGNET ASSY	1
28	119346	SUPPORT/TUBE SLIDE	1
29	119348	SWITCH/ASSY SHUTTLE RETURN	1
32	654026	LW 3/8	3
33	650491	CS 3/8X1-1/4	2
34	650486	CS 5/16X3/4	4
35	650419	CS 1/4X1-3/4	2
36	654002	FW 1/4	4
37	071700	LN 1/4	4
38	650835	CS 1/4X1	2
40	653018	HN 1/2	2
41	071701	LN 5/16	2
42	650490	CS 3/8X1	1
43	071703	LN 3/8	1
44	059075	CLAMP/HOSE	6
45	650201	SHSS 5/16X5/16	1
50	650315	TCS 1/4X1/2	4
68	061102	SPRING/COMPRESSION	2
72	064260	NILN 5/16	8
73	650687	CB 5/16X3/4	4
79	650545	CS 5/16X1-1/4	2
80	650573	CB 5/15X1	2
90	112423a	SWITCH	1
91	112414	BRACKET	1
92	112417	ACTUATOR	1
93	117995	MAGNET	1
94	119582	CLAMP	1
95	380-13297	SPRING	1
96	118169	RUBBER	1
97	119900	DUST CAP/IMPLEMENT HARNESS	1
98	119921	BUSHING/CONNECTOR CLAMP	1
99	119922	CLAMP/CONNECTOR	1

a) For repair, order the following connector kit numbers:
(Refer to connector locations on previous page)
***A – 119923**
***B – 119924**
***C – 119925 (Blue & Yellow Wires)**
***D – 119927 (Black & Red Wires)**
***E – 119929**

b) To replace complete implement harness, order:
(1) – 119891 - Implement Harness
(1) – 141192 - Receptacle Connector Kit
(1) – 119899 - Power Harness Dust Cap
(1) – 119886 - Connector Bracket
(1) – 650553 - Cotter Pin 1/8X3/4

To replace implement connector end to tractor, order:
(1) – 119922 - Connector Clamp
(1) – 119921 - Connector Clamp Bushing
(1) – 141193 - Plug Connector Kit
(1) – 141192 - Receptacle Connector Kit
(1) – 119900 - Implement Harness Dust Cap
(1) – 119899 - Power Harness Dust Cap
(1) – 119886 - Bracket Connector

To repair Power Connector (black & red wires), order:
(1) – 119927 - Connector Kit

To repair Signal Connector (blue & yellow wires), order:
(1) – 119925 - Connector Kit

c) Not available as a service part. Refer to the included Parts Breakdown.

d) For repair of (Metal) Connector, see page entitled 'Service Kits – Electrical Connectors'.

RB1475/1875 - AUTOMATIC BALE CONTROL

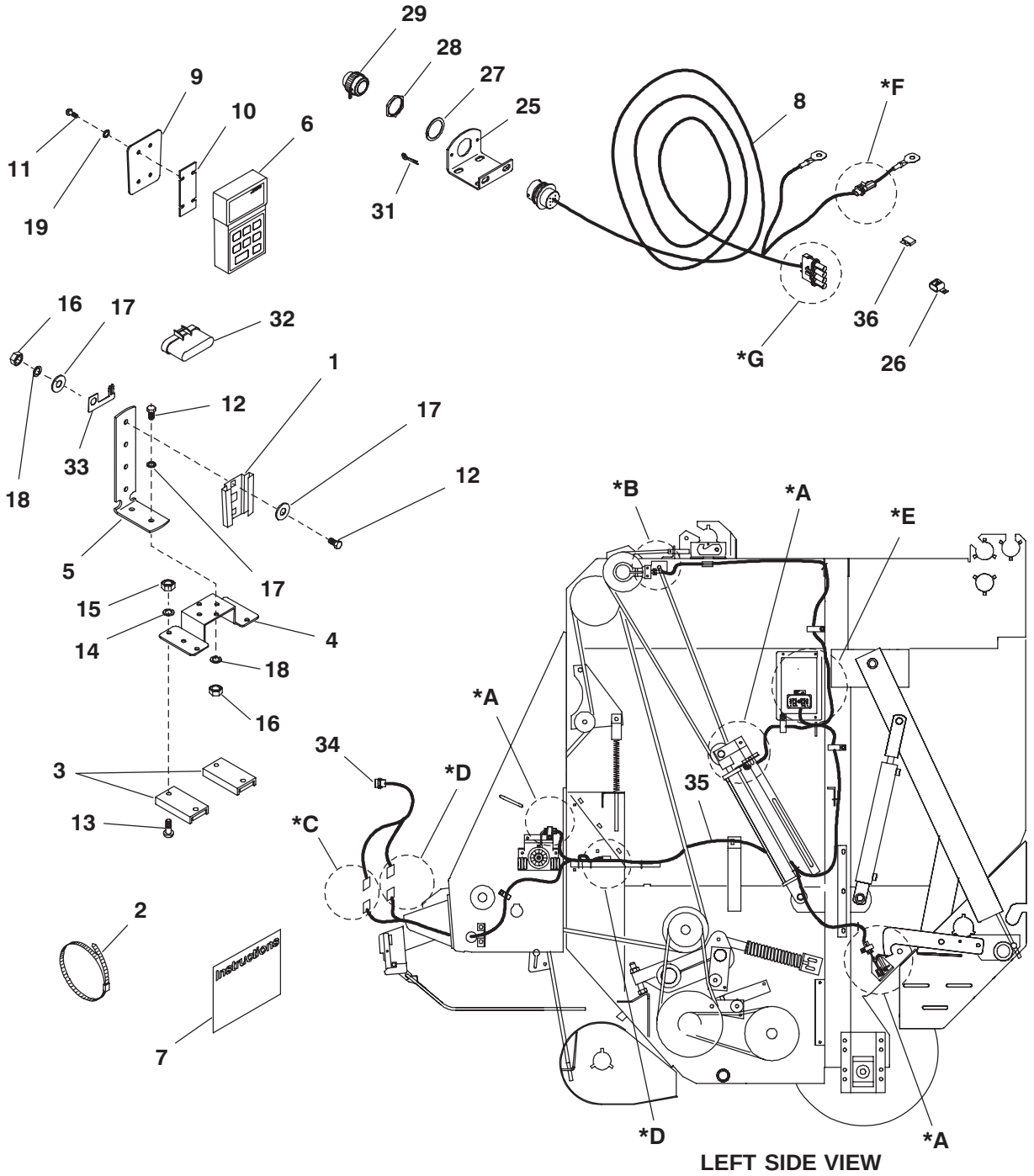

Ref. No.	Part No.	Description	Qty. Req.
01	047269	SOCKET/SIGN MOUNTING	1
02	055648	TIE/WIRE	2
03	067040	MAGNET/CONC HOPPER COVER	2
04	112484	MOUNT/CONTROL	1
05	112485	STRAP/MOUNT	1
06	112500	MODULE/CAB	1
07	119556	CARD/INSTRUCTION	1
08	119889[ab]	HARNESS/POWER (AFTER SN24000-1475 & 17500-1875)	1
	112286[ac]	HARNESS/POWER (BEFORE SN24001-1475 & 17501-1875)	1
09	119587	SOCKET/MALE	1
10	119588	PLATE/SUPPORT	1
11	650394	RHMS #6-32 1/2	4
12	650448	CS 1/4X3/4	4
13	650548	RHMS #10-24 1/2	4
14	650549	LW #10	4
15	650550	HN MS #10-24	4
16	653005	HN 1/4	4
17	654002	FW 1/4	6
18	654022	LW 1/4	4
19	654044	LW #6	4
25	119886	BRACKET/CONNECTOR (AFTER SN24000-1475 & 17500-1875)	1
	112486	BRACKET/CONNECTOR (BEFORE SN24001-1475 & 17501-1875)	1
26	119956	COVER/FUSE HOLDER	1
27	119897	LW 1-1/2	1
28	119896	NUT/PANEL 1-1/2	1
29	119899	DUST CAP/POWER HARNESS	1
31	650553	CP 1/8X3/4	1
32	120470	COVER/CONNECTOR	1
33	120472	CLIP/CONNECTOR	1
34	119891[a]	HARNESS/IMPLEMENT (AFTER SN24000-1475 & 17500-1875)	1
35	141465[a]	HARNESS/IMPLEMENT	1
36	127938	FUSE/20 AMP	1

a) For repair, order the following connector kit numbers:
(Refer to connector locations on previous page)
- ***A – 119923**
- ***B – 119924**
- ***C – 119925 (Blue & Yellow Wires)**
- ***D – 119927 (Black & Red Wires)**
- ***E – 119929**
- ***F – 119928**
- ***G – 119926**

b) For repair of (Metal) Connector, see page entitled Service Kits – Electrical Connectors.

c) To replace complete power harness, order:
- **(1) – 119922 - Connector Clamp**
- **(1) – 119921 - Connector Clamp Bushing**
- **(1) – 141193 - Plug Connector Kit**
- **(1) – 119900 - Implement Harness Dust Cap**
- **(1) – 119886 - Connector Bracket**
- **(1) – 119889 - Power Harness**
- **(1) – 119896 - Panel Nut 1-1/2**
- **(1) – 119897 - LW 1-1/2**
- **(1) – 119899 - Power Harness Dust Cap**
- **(1) – 650553 - Cotter Pin 1/8X3/4**

To replace tractor connector end to implement, order:
- **(1) – 119886 - Connector Bracket**
- **(1) – 119899 - Power Harness Dust Cap**
- **(1) – 119900 - Implement Harness Dust Cap**
- **(1) – 141192 - Receptacle Connector Kit**
- **(1) – 141193 - Plug Connector Kit**
- **(1) – 119921 - Connector Clamp Bushing**
- **(1) – 119922 - Connector Clamp**
- **(1) – 650553 - Cotter Pin 1/8X3/4**

To repair Harness Fuse Holder, order:
- **(1) – 119928 - Connector Kit**

To repair 6 Pin Connector to Cab Module, order:
- **(1) – 119926 - Connector Kit**

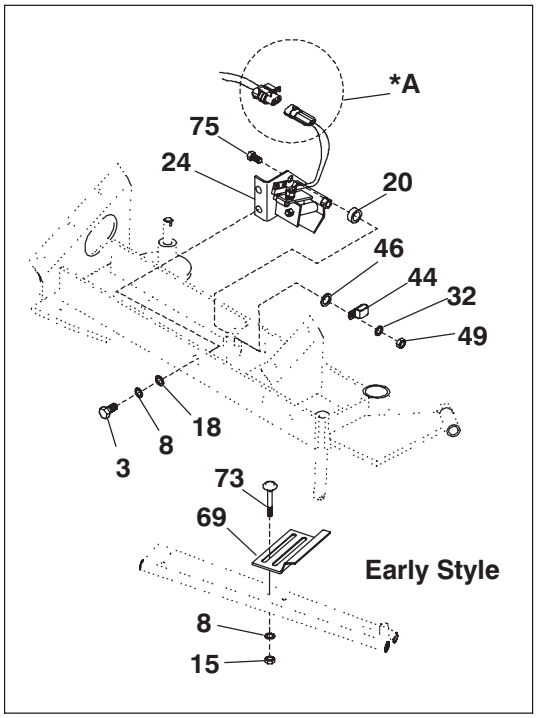

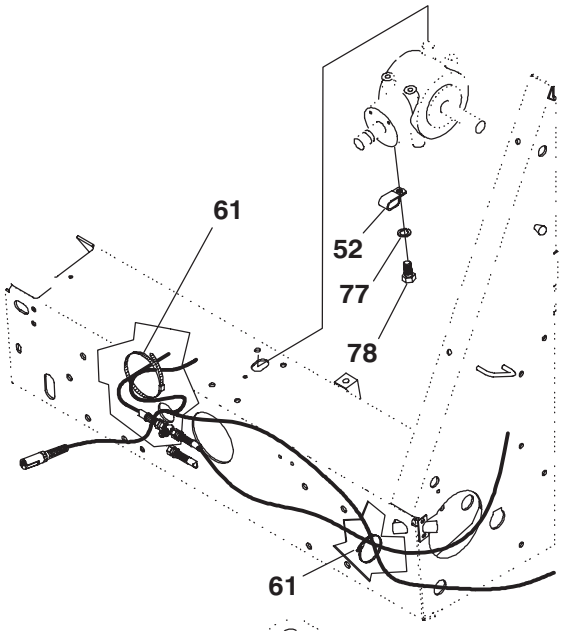

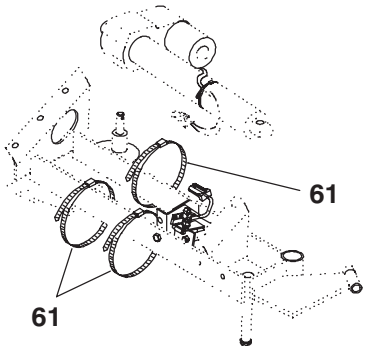

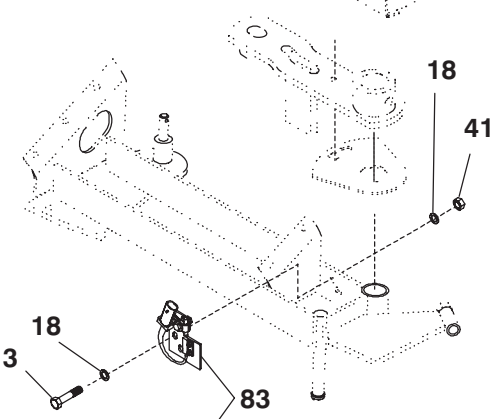

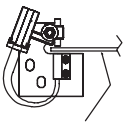

Cam must pass between magnet and switch without touching the magnet or the switch.

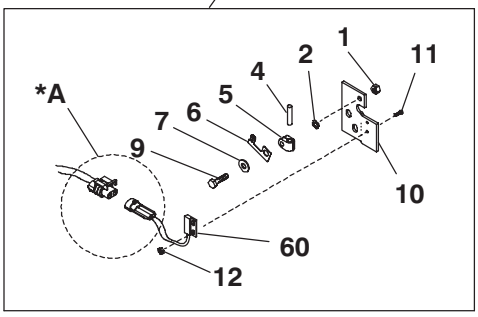

Ref. No.	Part No.	Description	Qty. Req.
01	071700	LN 1/4	1
02	651157	LW ET 1/4	1
03	650487	CS 5/16X1	4
04	117995	MAGNET	1
05	120473	CLAMP	1
06	120472	CLIP/CONNECTOR	1
07	654002	FW 1/4	1
08	654024	LW 5/16	3
09	650835	CS 1/4X1	1
10	119903	BRACKET/PAUSE SWITCH	1
11	651212	RHMS #5-40X1/2	2
12	651328	NILN #5-40	2
15	653007	HN 5/16	1
18	654004	FW 5/16	7
20	6H130	BEARING/CONVEYOR PIVOT	1
24	NS[b]	SWITCH/TAILGATE ASSY (BEFORE SN24001-1475 & 17501-1875)	2
32	654026	LW 3/8	1
41	071701	LN 5/16	2
44	059075	CLAMP/HOSE	1
46	654006	FW 3/8	1
49	653010	HN 3/8	1
52	073535	CLAMP/HOSE	1
60	112423[a]	SWITCH	1
61	055648	TIE/WIRE	5
69	119625	BRACKET/TRIP	1
73	650687	CB 5/16X3/4	1
75	650533	CS 3/8X1-1/2	1
77	654030	LW 1/2	1
78	650494	CS 1/2X1	1
83	NS[b]	SWITCH/PAUSE ASSY	1

a) For repair, order the following connector kit number: *A – 119923

b) Not available as a service part. Refer to the included Parts Breakdown.

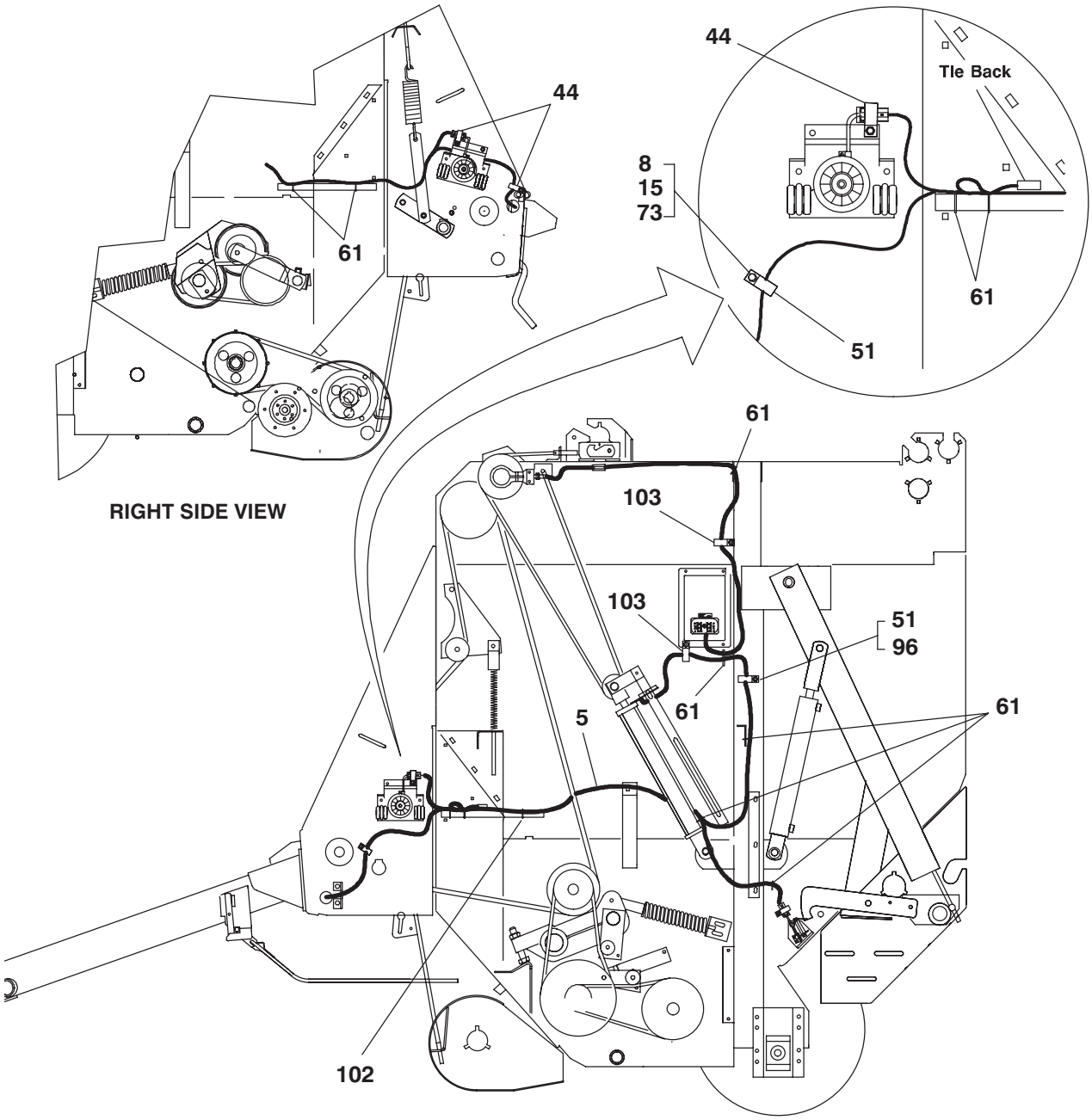

Ref. No.	Part No.	Description	Qty. Req.	Ref. No.	Part No.	Description	Qty. Req.
05	141465	HARNESS/IMPLEMENT	1	61	055648	TIE/WIRE	9
08	654024	LW 5/16	2	73	650687	CB 5/16X3/4	2
15	653007	HN 5/16	2	96	650985	TCS 5/16X3/4	1
44	059075	CLAMP/HOSE	3	102	063592	CABLE/TIE	1
51	075505	CLAMP/HOSE	3	103	076078	CLAMP	2

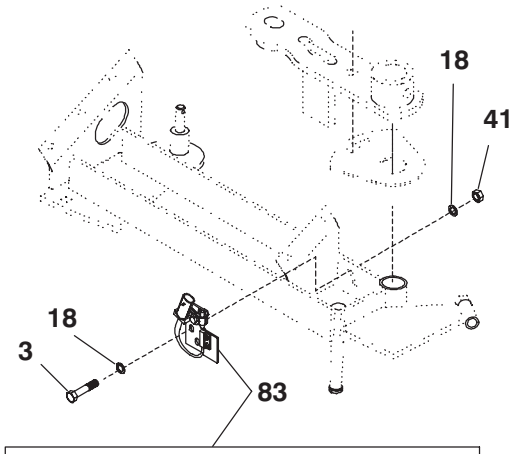

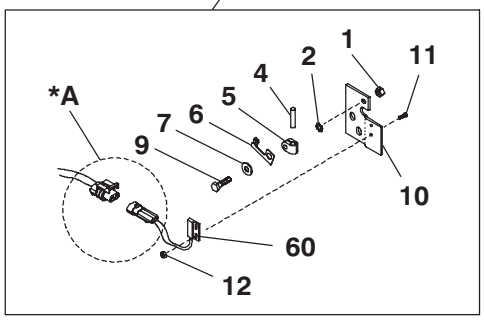

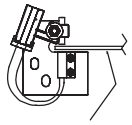

Cam must pass between magnet and switch without touching the magnet or the switch.

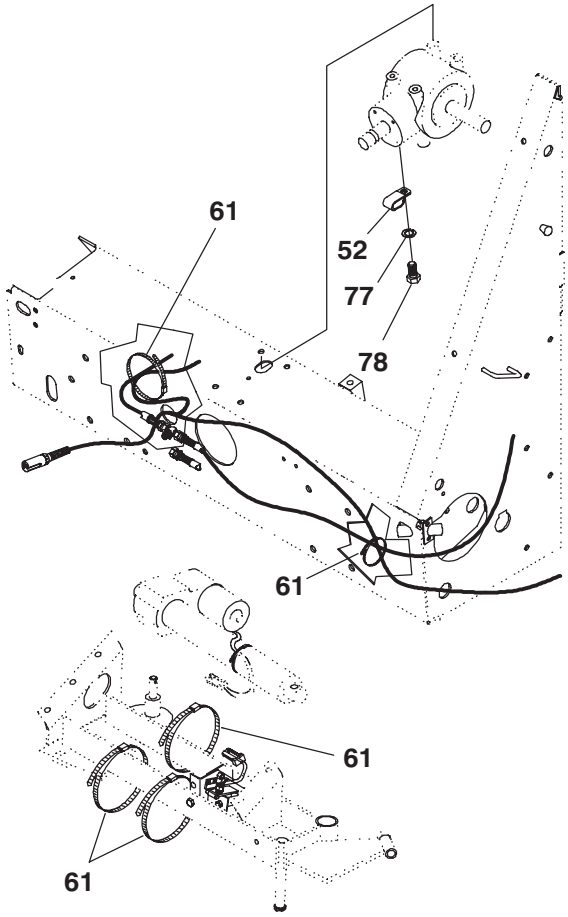

Ref. No.	Part No.	Description	Qty. Req.
01	071700	LN 1/4	1
02	651157	LW ET 1/4	1
03	650487	CS 5/16X1	2
04	117995	MAGNET	1
05	120473	CLAMP	1
06	120472	CLIP/CONNECTOR	1
07	654002	FW 1/4	1
09	650835	CS 1/4X1	1
10	119903	BRACKET/PAUSE SWITCH	1
11	651212	RHMS #5-40X1/2	2
12	651328	NILN #5-40	2
18	654004	FW 5/16	4
41	071701	LN 5/16	2
52	073535	CLAMP/HOSE	1
60	112423[a]	SWITCH	1
61	055648	TIE/WIRE	5
77	654030	LW 1/2	1
78	650494	CS 1/2X1	1
83	NS[b]	SWITCH ASSY/PAUSE	1

a) For repair, order the following connector kit number: *A – 119923

b) Not available as a service part. Refer to the included Parts Breakdown.

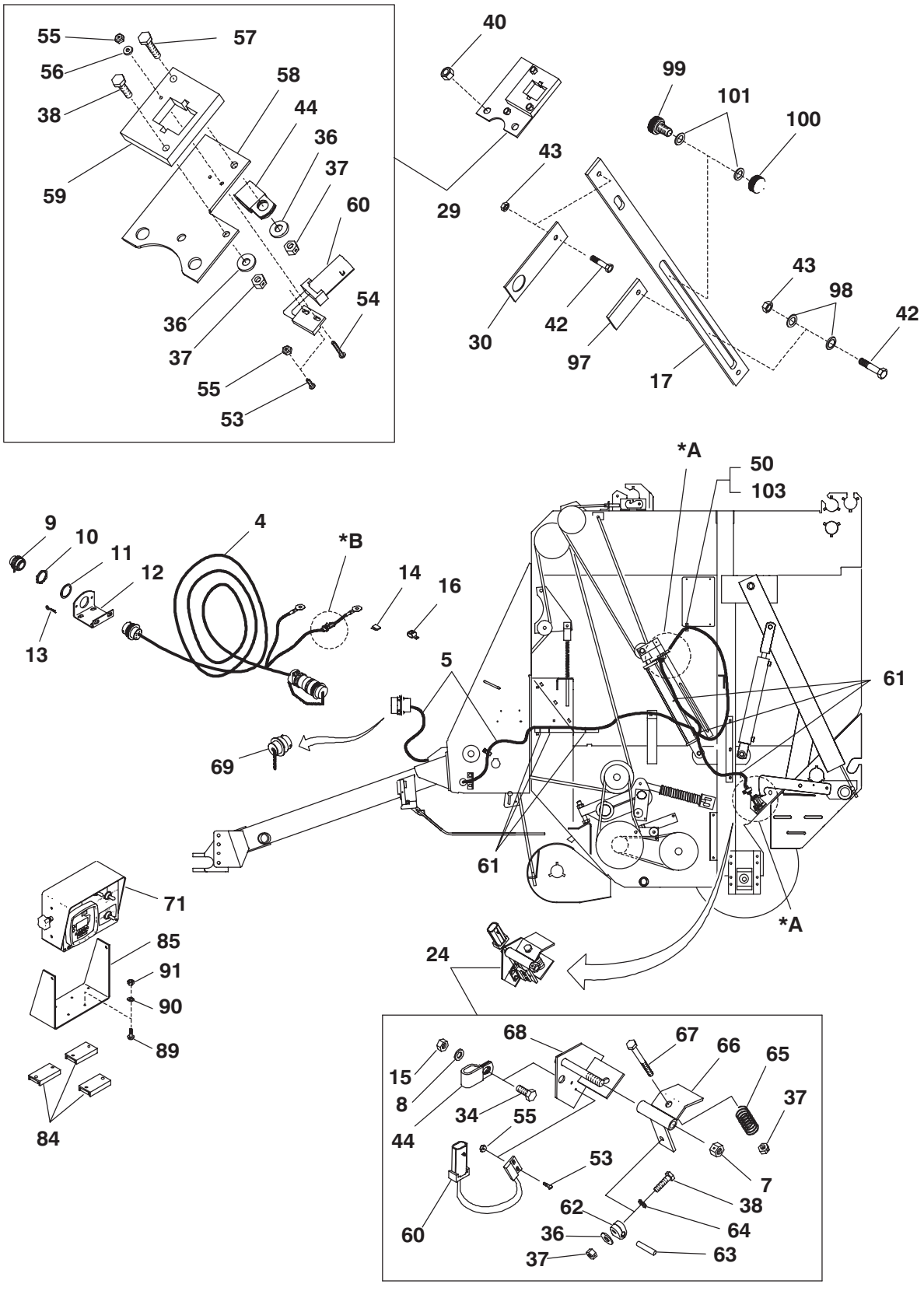
55
57
56
58
38
44
36
37
59
60
54
36
37
55
53
40
29
99
101
100
43
30
42
97
17
43
98
42
*A
50
103
9
10
11
12
13
4
*B
14
16
5
69
61
61
*A
71
85
91
90
89
84
24
68
67
66
65
37
15
8
34
55
44
53
7
38
62
64
60
36
63
37

Ref. No.	Part No.	Description	Qty. Req.
04	120924$_{ad}$	HARNESS/POWER	1
05	120925$_{ad}$	HARNESS/IMPLEMENT	1
07	071703	LN 3/8	1
08	654024	LW 5/16	1
09	119899	CAP/POWER HARNESS DUST	1
10	119896	NUT/PANEL	1
11	119897	LW 1-1/2	1
12	119886	BRACKET/CONNECTOR	1
13	650553	CP 1/8X3/4	1
14	127938	FUSE/20 AMP	1
15	653007	HN 5/16	1
16	119956	COVER/FUSE HOLDER	1
17	141229	SLIDE	1
24	NS$_{b}$	SWITCH/TAILGATE ASSY	2
29	NS$_{b}$	SWITCH/SHUTTLE RETURN ASSY	1
30	141070	PLATE	1
34	650486	CS 5/16X3/4	1
36	654002	FW 1/4	3
37	071700	LN 1/4	4
38	650835	CS 1/4X1	1
40	653018	HN 1/2	2
42	650490	CS 3/8X1	2
43	067847	NILN 3/8	2
44	059075	CLAMP/HOSE	2
50	650315	TCS 1/4X1/2	1
53	651212	RHMS #5-40X1/2	3
54	651346	RHMS #5-40X1	1
55	651328	NILN #5-40	4
56	650848	FW #6 WIDE	1
57	650426	CS 1/4X1-1/4	1
58	141072	MOUNT/SLIDE	1
59	141071	SUPPORT/SLIDE	1
60	112423$_{a}$	SWITCH	2
61	055648	TIE/WIRE	6
62	120473	CLAMP	1
63	117995	MAGNET	1
64	651157	LW ET 1/4	1
65	380-13297	SPRING	1
66	120490	ACTUATOR	1
67	650958	CS 1/4X2-3/4	1
68	120492	BRACKET	1
69	119900	CAP/DUST	1
71	155647$_{c}$	CONTROL BOX/AUTOTWINE TIE	1
84	067040	MAGNET/CONC HOPPER COVER	3
85	141080	SUPPORT/CONTROL	1
89	650548	RHMS #10-24X1/2	6
90	650549	LW #10	6
91	650550	HN MS #10-24	6
97	141525	DAMPENER	1
98	654006	FW 3/8	2
99	141082	MAGNET	1
100	141077	NUT/MAGNET	1
101	141526	WASHER/NYLON 1/2	2
103	076078	CLAMP	1

a) For repair, order the following connector kit numbers:
***A – 119923**
***B – 119928**

b) Not available as a service part. Refer to the included Parts Breakdown.

c) For individual component parts see page entitled 'Control Box'.

d) For repair of (Metal) Connector, see page entitled 'Service Kits – Electrical Connectors'.

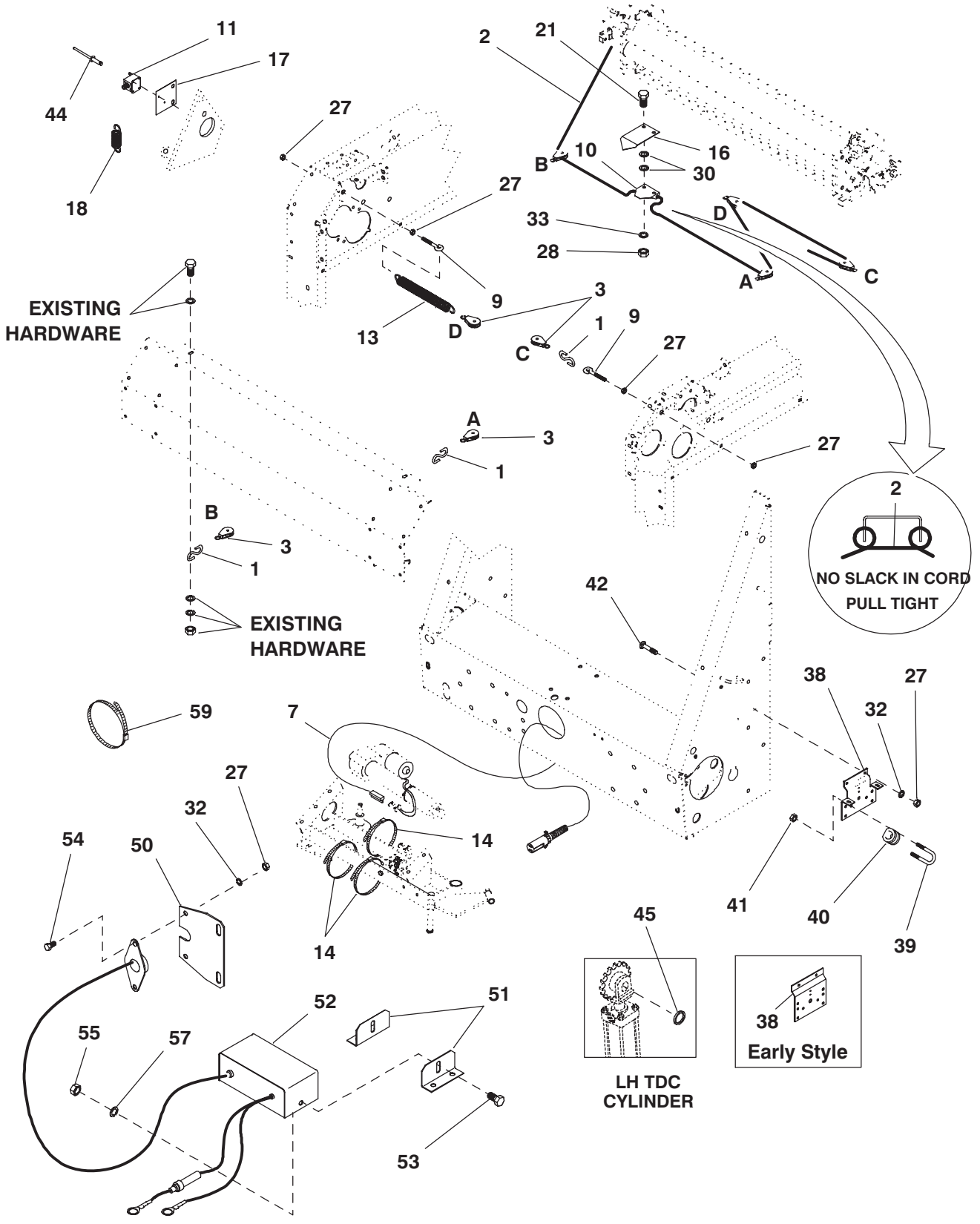
11
17
44
18
27
2
21
B
10
16
30
27
33
28
D
A
C
9
13
D
3
C
1
9
27
EXISTING
HARDWARE
A
3
1
27
B
3
1
EXISTING
HARDWARE
2
NO SLACK IN CORD
PULL TIGHT
42
59
7
38
27
32
27
32
54
50
14
14
41
40
39
45
38
Early Style
LH TDC
CYLINDER
52
51
55
57
53

Ref. No.	Part No.	Description	Qty. Req.
01	B11433A	HOOK-S	3
02	052595	CORD/DEFLECTOR (1475)	1
	070607	CORD/DEFLECTOR (1875)	1
03	058539	PULLEY	4
07	061060	CABLE/ACTUATOR	1
09	065811	BOLT/EYE	2
10	066174	BASE/INDICATOR	1
11	066765	COUNTER/HAY BALER	1
13	078295	SPRING/EXTENSION	1
14	082808	TIE/CABLE	3
16	119555	INDICATOR/BALE SIZE	1
17	119560	BRACKET/COUNTER	1
18	17H387	SPRING/EXTENSION	1
21	650488	CS 3/8X3/4	2
27	653007	HN 5/16	10
28	653010	HN 3/8	2
30	654006	FW 3/8	4
32	654024	LW 5/16	6
33	654026	LW 3/8	2
38	141710	BRACKET (AFTER SN24000-1475 & 17500-1875)	2
	118170	BRACKET (BEFORE SN24001-1475 & 17501-1875)	2
39	B11069	U BOLT/ECCENTRIC SHAFT	2
40	059721	GUIDE/ROPE	2
41	064260	NILN 5/16	4
42	650687	CB 5/16X3/4	4
44	076122	RIVET/BLIND	2
45	B11162B	FW 1-17/64	1
50	059052	BRACKET/RECEPTACLE	1
51	059053	BRACKET/MOUNTING	2
52	060375[a]	BOX/TRANS CONTROL ASSMD	1
53	650448	CS 1/4X3/4	2
54	650487	CS 5/16X1	2
55	653005	HN 1/4	2
57	654022	LW 1/4	2
59	055648	TIE/WIRE	1

a) For further breakdown, see page entitled 'Control Box'.

RB1475/1875 - CONTROL BOX

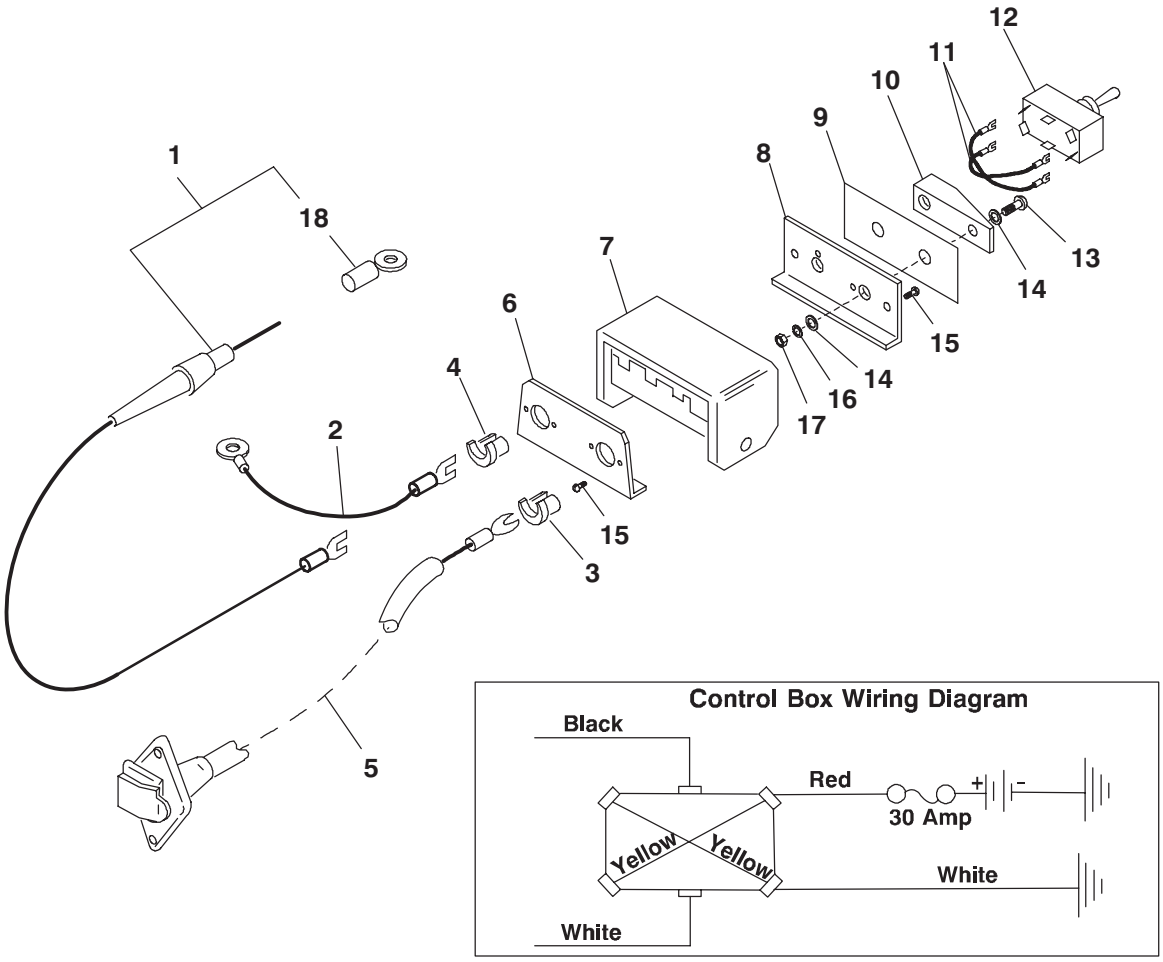

Ref. No.	Part No.	Description	Qty. Req.	Ref. No.	Part No.	Description	Qty. Req.
	060375	BOX/TRANS CONTROL	1	09	060971	DECAL/SWITCH BOX	1
		CONSISTS OF:		10	060972	GUARD/TOGGLE	1
01	057778	CABLE/POWER SUPPLY	1	11	059064	CABLE/YELLOW	2
02	057779	CABLE/GROUND	1	12	059299	SWITCH/TOGGLE	1
03	057781	BUSHING/5K-4	1	13	650943	THMS 1/4X1/2	1
04	059321	BUSHING/7K-2	1	14	654002	FW 1/4	2
05	060376	CABLE/TRACTOR TRANS ASSY	1	15	650702	TFS #6X3/8	4
06	069257	PLATE/BACK	1	16	654022	LW 1/4	1
07	069255	BOX/DEFLECTOR ASSY	1	17	653005	HN 1/4	1
08	059059	PLATE/SWITCH CAP	1	18	077717	RING/TERMINAL 5/16	1

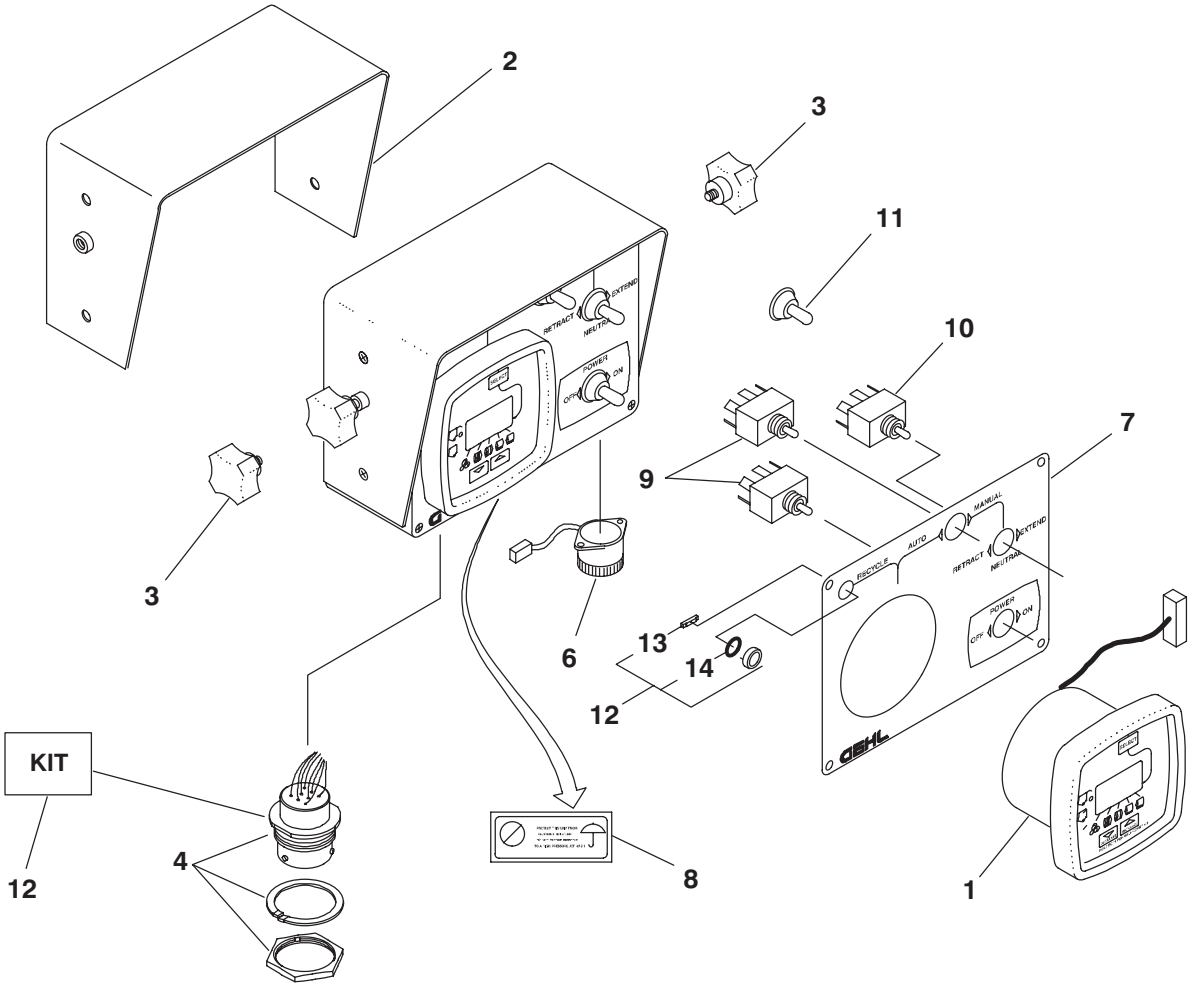

Ref. No.	Part No.	Description	Qty. Req.
	155647	BOX/AUTO TWINE WRAP CONTROL	1
		CONSISTS OF:	
01	141478	MODULE/UDM	1
02	141479	VISOR/SUN	1
03	141480	KNOB	3
04	141192	CONNECTOR KIT/RECEPTACLE	1
06	141481	ALARM/BALER CONTROL	1
07	141482	DECAL	1
08	143197	DECAL/MOISTURE	1
09	143198	SWITCH/TOGGLE	2
10	143199	SWITCH/TOGGLE	1
11	143200	BOOT/SWITCH	3
12	155650	SWITCH/BUTTON	3
13	155660	CLIP	1
14	155661	SEAL	1

RB1475/1875 - AXLE ASSEMBLY

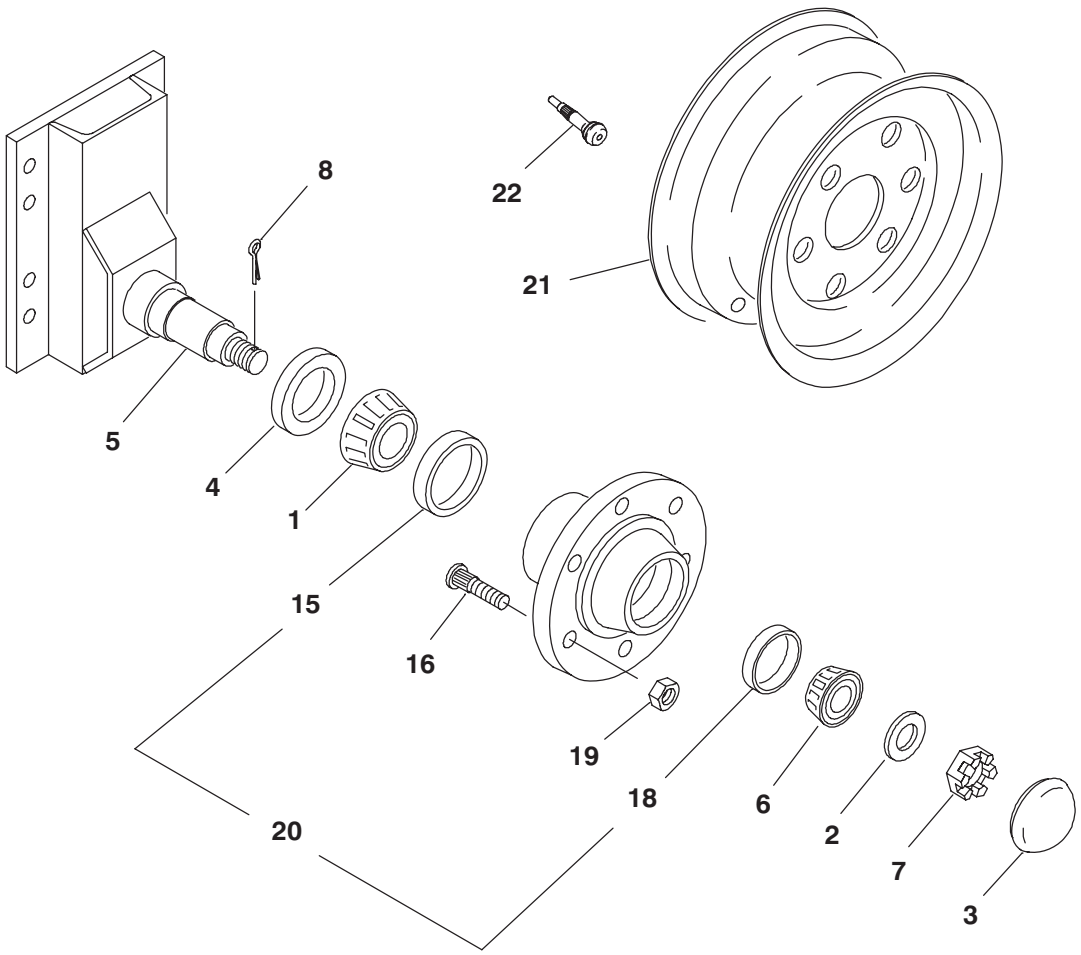

Ref. No.	Part No.	Description	Qty. Req.	Ref. No.	Part No.	Description	Qty. Req.
01	042163	CONE/WHEEL BEARING	2	15	042162	CUP/WHEEL BEARING	2
02	066717	FW 31/32	2	16	120822	BOLT/WHEEL	12
03	076586	CAP/GREASE	2	18	520054	CUP/BEARING	2
04	079716	SEAL/GREASE	2	19	046001	NUT/WHEEL	12
05	084682	AXLE/ADJ ASSY	2	20	091870	HUB/WHEEL ASSEMBLY	2
06	520201	CONE/BEARING	2	21	126739	WHEEL/RIM (14X8)	2
07	653102	NUT 7/8	2		112442	WHEEL/RIM (15X10)	2
08	655010	CP 1/8X1-1/2	2	22	045582	VALVE/TIRE	2

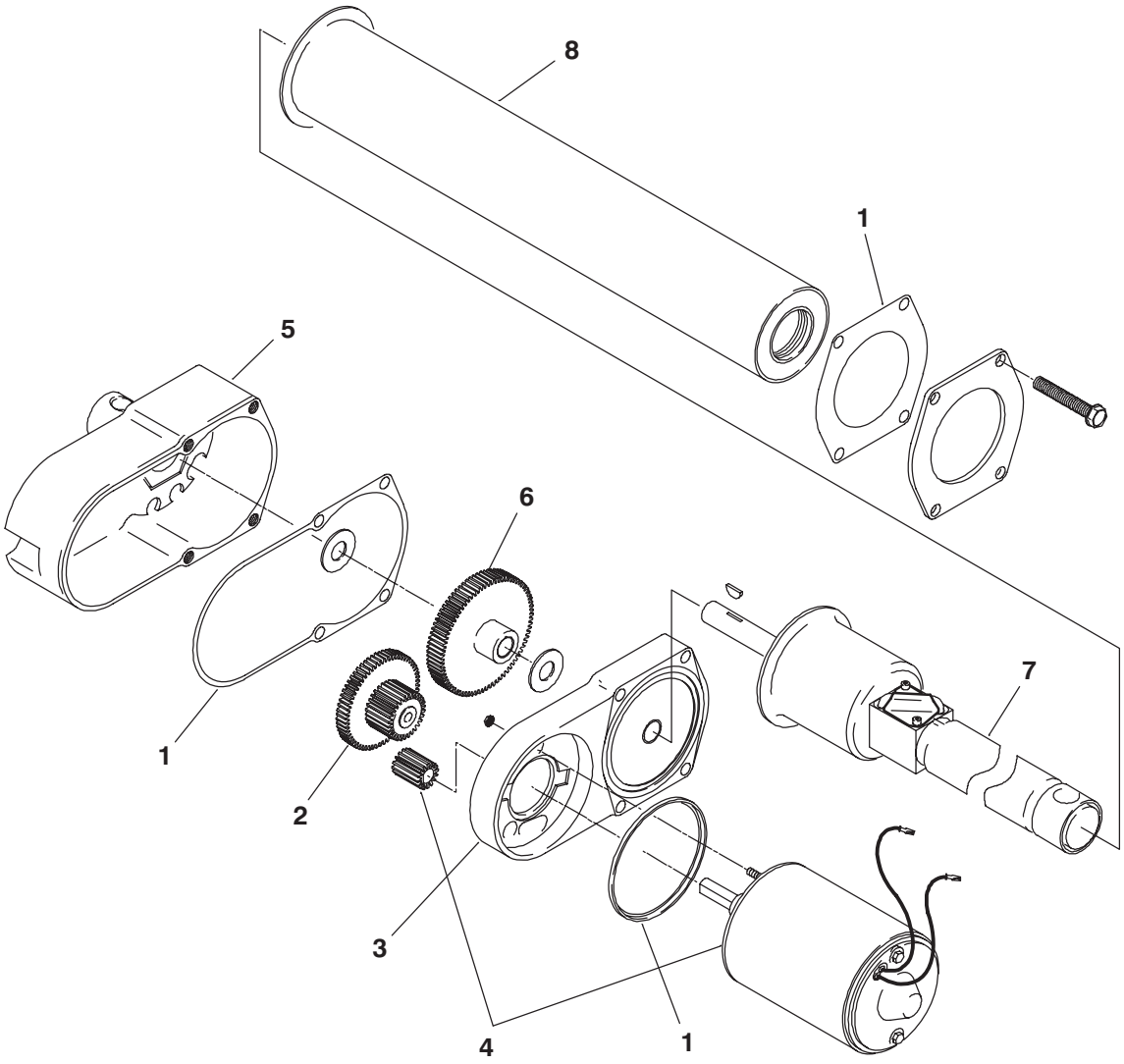

Ref. No.	Part No.	Description	Qty. Req.
	120509	ACTUATOR (TWINE TIE)	1
	126236	ACTUATOR (NET WRAP)	1
		CONSISTS OF:	
01	077097	KIT/SEAL	1
02	077095	GEAR/INTERMEDIATE	1
03	089955	HOUSING/FRONT	1
04	089958[a]	MOTOR	1
05	077098	HOUSING/REAR	1
06	089956	GEAR/DRIVEN	1
07	126248	SCREW & BRAKE ASSY (NET WRAP)	1
	120825	SCREW & BRAKE ASSY (TWINE TIE)	1
08	089957	TUBE/COVER	1

a) Includes Drive Gear.

RB1475/1875 - TRANSMISSION (540 RPM)

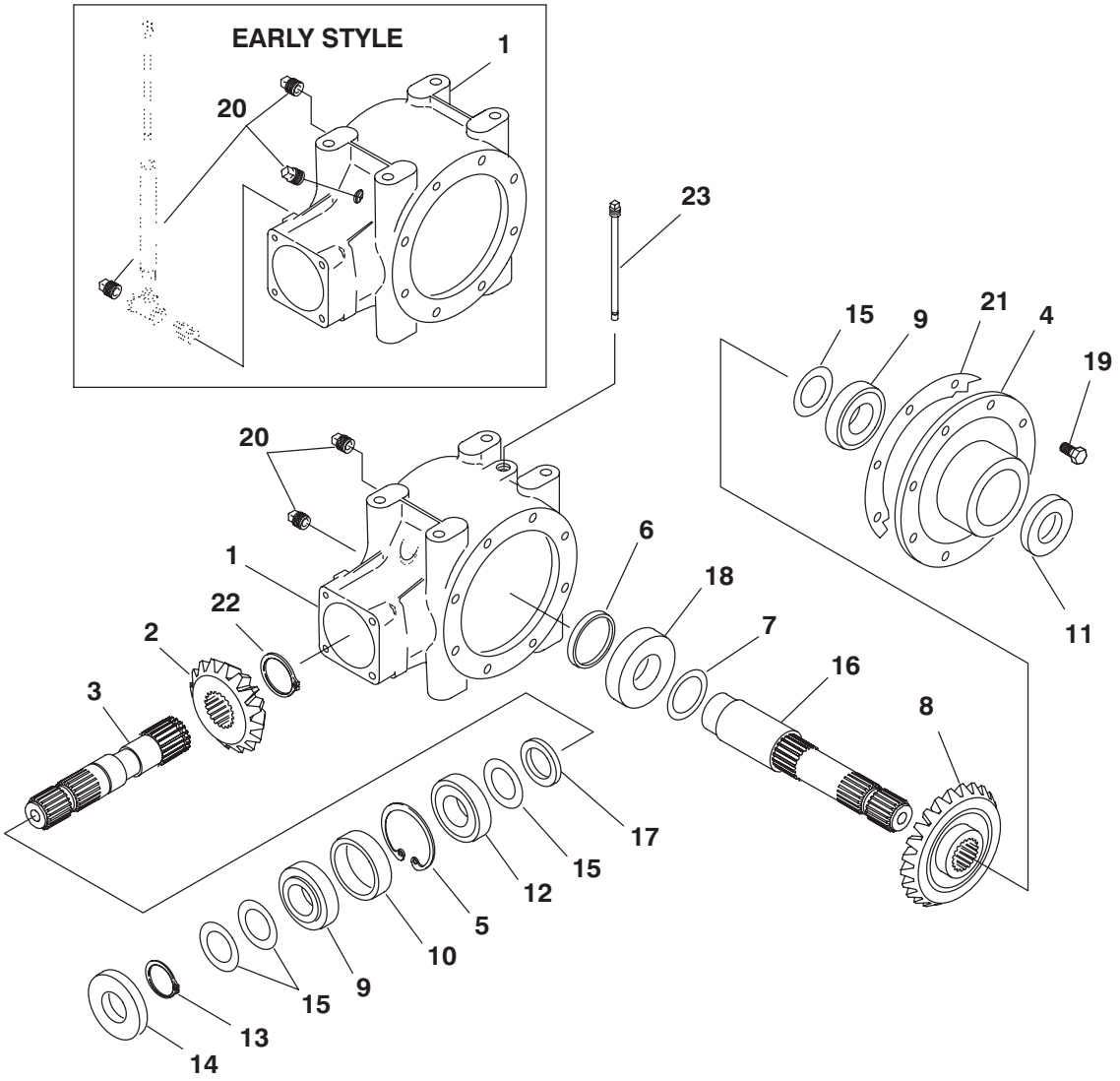

Ref. No.	Part No.	Description	Qty. Req.
	141549	TRANSMISSION/540 RPM	1
		(AFTER SN25000-1475 & 17900-1875)	
	094804	TRANSMISSION/540 RPM	1
		(BEFORE SN25001-1475 & 17901-1875)	
		CONSISTS OF:	
01	141474	CASTING/GEARBOX	1
		(AFTER SN25000-1475 & 17900-1875)	
	126830	CASTING/GEARBOX	1
		(BEFORE SN25001-1475 & 17901-1875)	
02	126839	PINION	1
03	126840	SHAFT	1
04	126831	COVER	1
05	089133	RING/SNAP	1
06	089141	CAP	1
07	126641	KIT/SHIM	1
08	126841	GEAR	1
09	090088	BEARING	2
10	126834	SPACER	1
11	126835	SEAL/OIL	1
12	141551	BEARING	1
13	090092	RING/RETAINING	1
14	090090	SEAL/OIL	1
15	084595	SHIM	4
16	126842	SHAFT	1
17	084591	SPACER	1
18	126836	BEARING	1
19	656001	CS M8-1.25X20	6
20	097208	PLUG/GAS 3/8	3
21	126837	GASKET	1
22	119892	RING/SNAP	1
23	141645	DIPSTICK/BREATHER	1

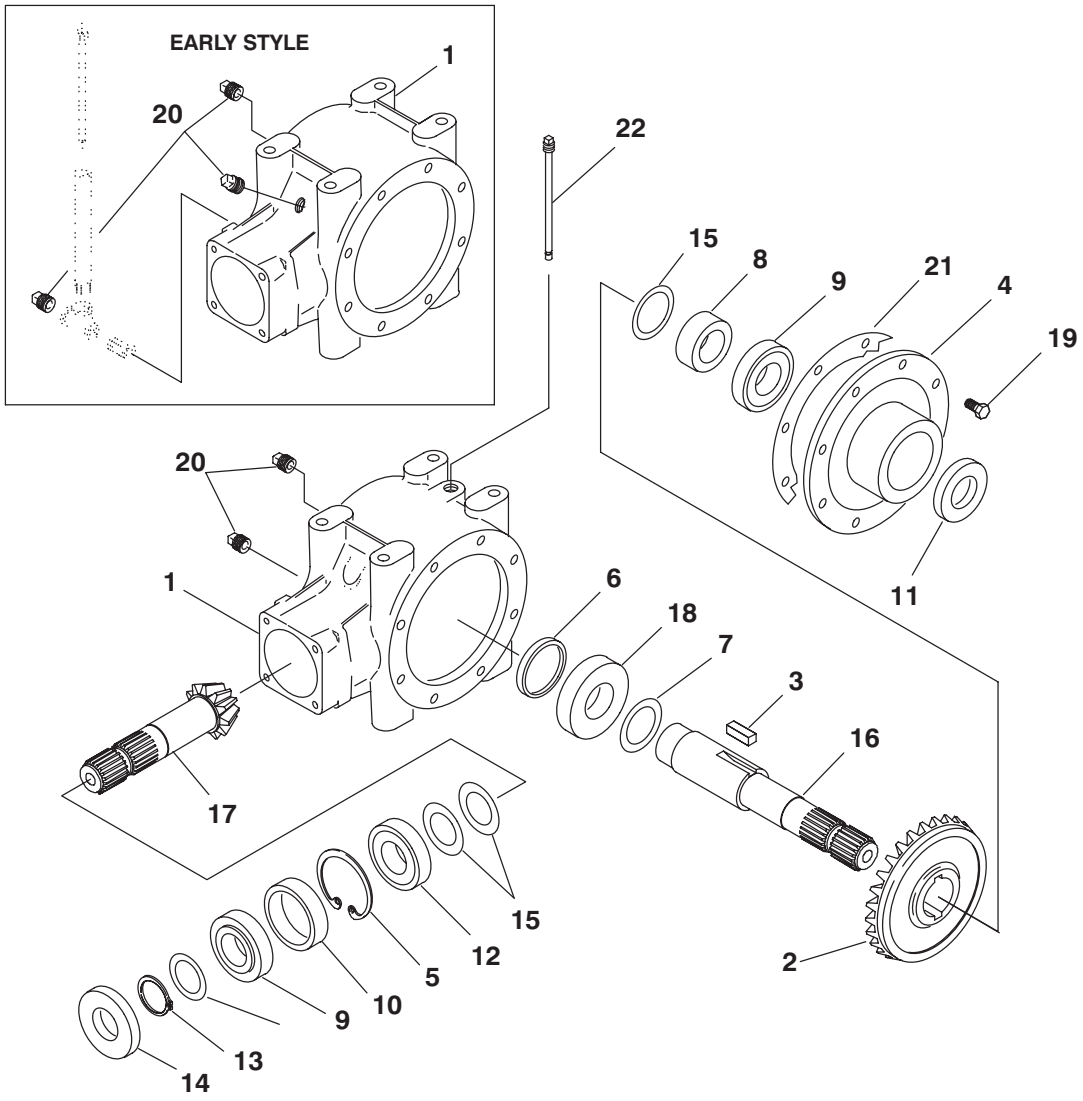

Ref. No.	Part No.	Description	Qty. Req.
	141550	TRANSMISSION/1000 RPM	1
		(AFTER SN25000-1475 & 17900-1875)	
	126829	TRANSMISSION/1000 RPM	1
		(BEFORE SN25001-1475 & 17901-1875)	
		CONSISTS OF:	
01	141474	CASTING/GEARBOX	1
		(AFTER SN25000-1475 & 17900-1875)	
	126830	CASTING/GEARBOX	1
		(BEFORE SN25001-1475 & 17901-1875)	
02	126843	GEAR	1
03	126844	KEY	2
04	126831	COVER	1
05	089133	RING/SNAP	1
06	089141	CAP	1
07	126641	KIT/SHIM	1
08	126845	SPACER	1
09	090088	BEARING	2
10	126834	SPACER	1
11	126835	SEAL/OIL	1
12	141551	BEARING	1
13	090092	RING/RETAINING	1
14	090090	SEAL/OIL	1
15	084595	SHIM	4
16	126846	SHAFT	1
17	126847	SHAFT	1
18	126836	BEARING	1
19	656001	CS M8-1.25X20	6
20	097208	PLUG/GAS 3/8	3
21	126837	GASKET	1
22	141645	DIPSTICK/BREATHER	1

RB1475/1875 - UNIVERSAL DRIVE

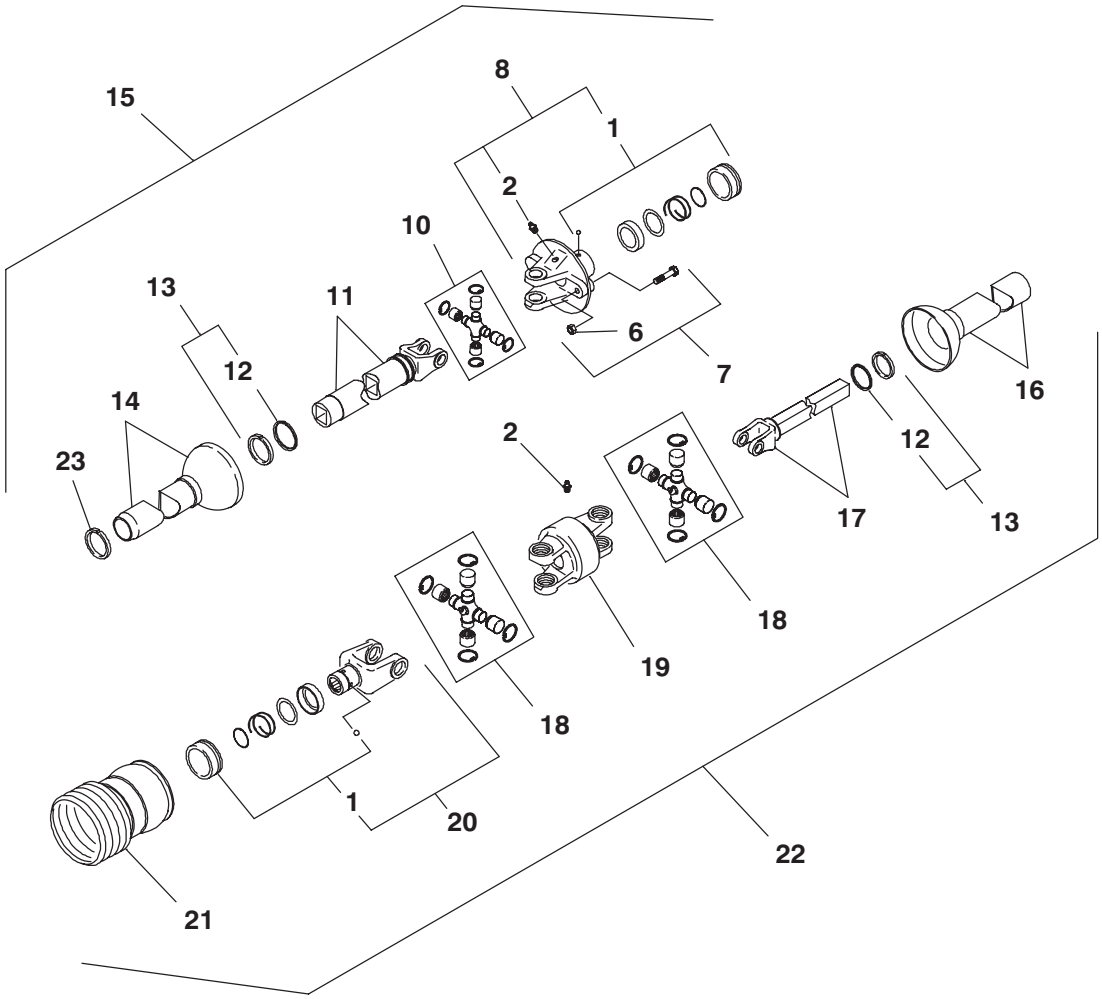

Ref. No.	Part No.	Description	Qty. Req.
01	086925	KIT/SPRING LOCK REPAIR	2
02	570019	FITTING/GREASE	2
06	071700	LN 1/4	1
07	095141[a]	BOLT/SHEAR (1/4X1-1/2 Gr.9, 540RPM)	1
	900084[a]	BOLT/SHEAR (1/4X1-1/2 Gr 5, 1000RPM)	1
08	119453	FREE MOTION ASSY (540 RPM)	1
	119600	FREE MOTION ASSY (1000 RPM)	1
10	510114	KIT/CENTER CROSS	1
11	119454[c]	YOKE TUBE & SLIP SLEEVE (540 RPM)	1
	119590[c]	YOKE TUBE & SLIP SLEEVE (1000 RPM)	1
12	510100	RETAINER/BEARING	2
13	095130	KIT/REPAIR	2
14	119455	GUARD/INNER (540 RPM)	1
	119589	GUARD/INNER (1000 RPM)	1
15	119373	JOINT/UNIVERSAL IMPL (540 RPM)	1
	119585	JOINT/TUBE W/GUARD (1000 RPM)	1
16	086936[b]	GUARD/OUTER	1
17	086935	YOKE W/SHAFT ASSY	1
18	141779	KIT/CROSS REPAIR	2
19	090895	HOUSING/CV CENTER	1
20	086938	YOKE/SPRING LOCK ASSY (540 RPM)	1
	092792	YOKE/SPRING LOCK ASSY (1000 RPM)	1
21	144451	GUARD/PLASTIC	1
22	084404	JOINT/UNIV TRACTOR (540 RPM)	1
	119586	JOINT/SHAFT W/GUARD (1000 RPM)	1
23	510215	BEARING/CENTRALIZER	1

a) Contains 8 Shear Bolts and 8 Lock Nuts.
b) Includes Decal 091444.
c) Includes Decal 143007.

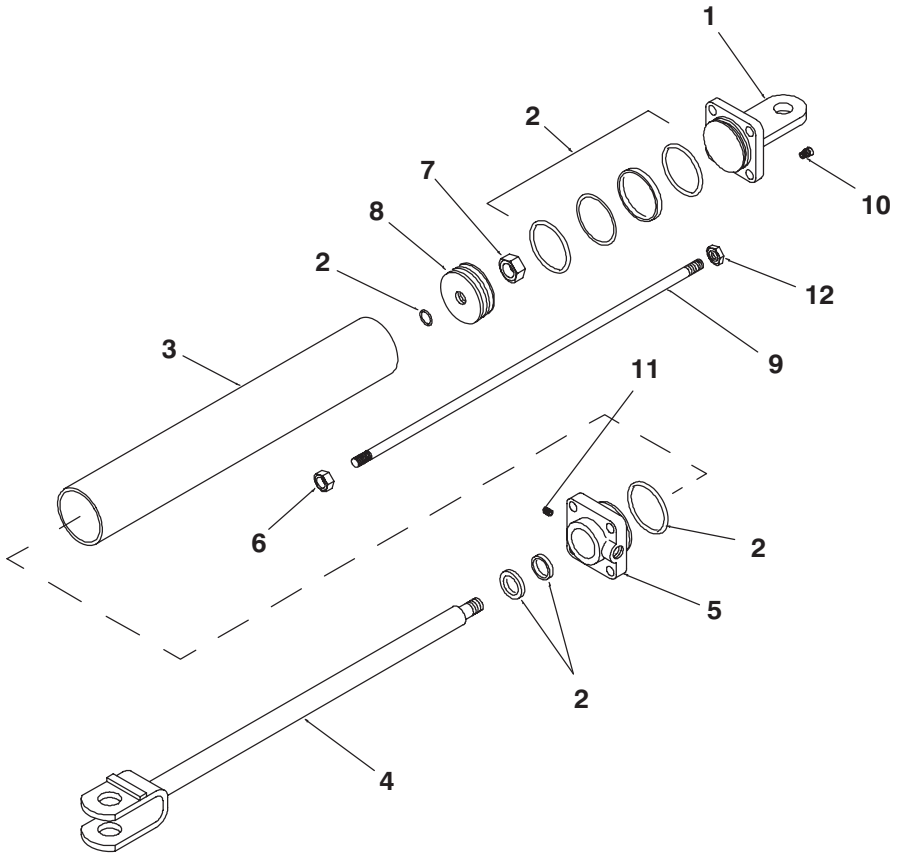

Ref. No.	Part No.	Description	Qty. Req.
	127115	CYLINDER/HYD. ASSY 3X20.5 (1475)	1
	127117	CYLINDER/HYD. ASSY 3X25 (1875)	1
		CONSISTS OF:	
01	126763	CAP/ANCHOR	1
02	126666	KIT/SEAL	1
03	126910	TUBE/TDC (1475)	1
	126919	TUBE/TDC (1875)	1
04	126911	ROD/TDC CYL ASSY (1475)	1
	126920	ROD/TDC CYL ASSY (1875)	1
05	126912	CAP/ROD	1
06	653044	JN 1/2	4
07	126530	LN 3/4	1
08	126914	PISTON	1
09	074785	ROD/TIE (1475)	4
	077955	ROD/TIE (1875)	4
10	570016	FITTING/RELIEF	1
11	126918	PLUG/SAE HEX SOCKET	1
12	653018	HN 1/2	4

RB1475/1875 - OVERRUNNING CLUTCH

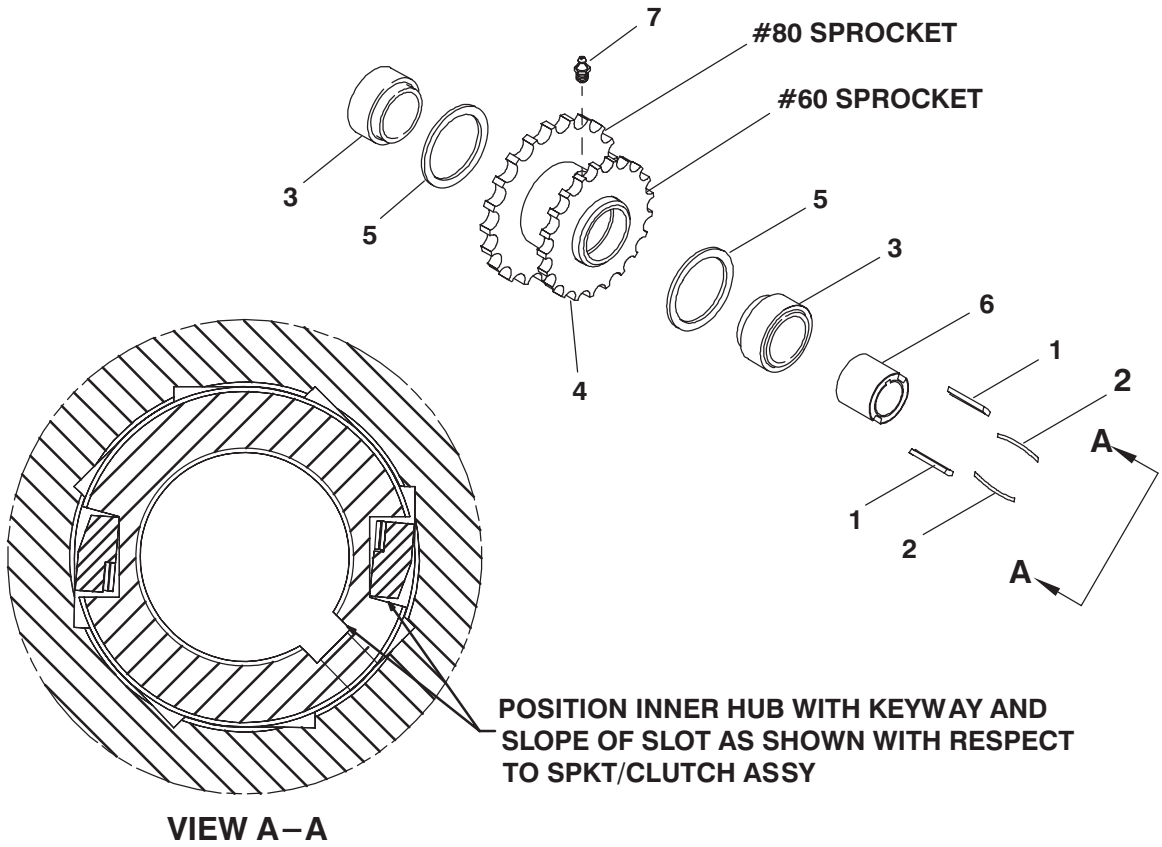

VIEW A–A

Ref. No.	Part No.	Description	Qty. Req.	Ref. No.	Part No.	Description	Qty. Req.
01	055371	KEY/DRIVE	2	05	119045	WASHER/1.406 HT	2
02	055372	SPRING/LEAF	2	06	119050	HUB/INNER OVERRUNNING	1
03	076992	BEARING/BALL	2	07	570002	FITTING/GREASE	1
04	119031	SPRKT/CLUTCH ASSY	1				

Wesbar Hitchjack

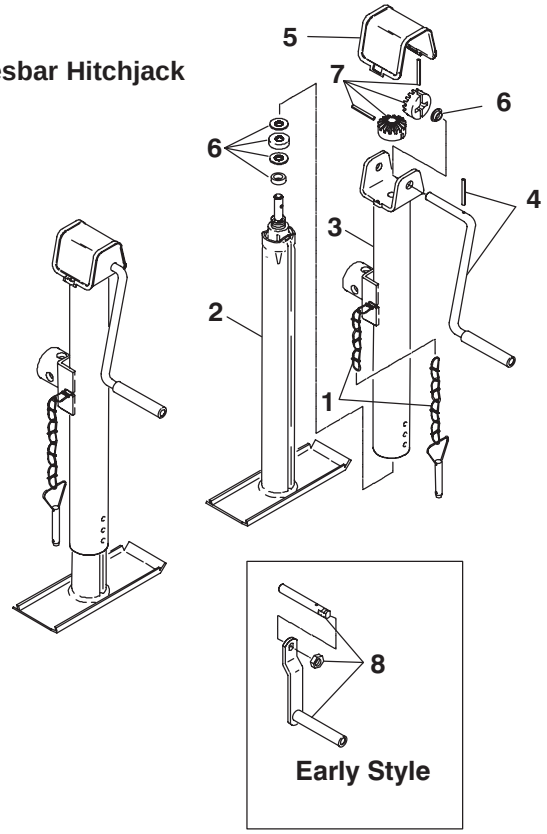

Ref. No.	Part No.	Description	Qty. Req.
	088841	HITCHJACK - WESBAR	1
		CONSISTS OF:	
01	061276	PIN & CHAIN	1
02	081462	TUBE/INNER ASSY	1
03	092021	TUBE/OUTER	1
04	126735	HANDLE (LATER STYLE)	1
	081463[a]	HANDLE & NUT (EARLY STYLE)	1
05	077838	CAP/TOP	1
06	094283	KIT/INTERNAL PARTS	1
07	077836	KIT/GEAR	1
08	077839[a]	SHAFT/CROSS	1

a) **Replaced by 126735 later style Handle.**

Fulton Hitchjack

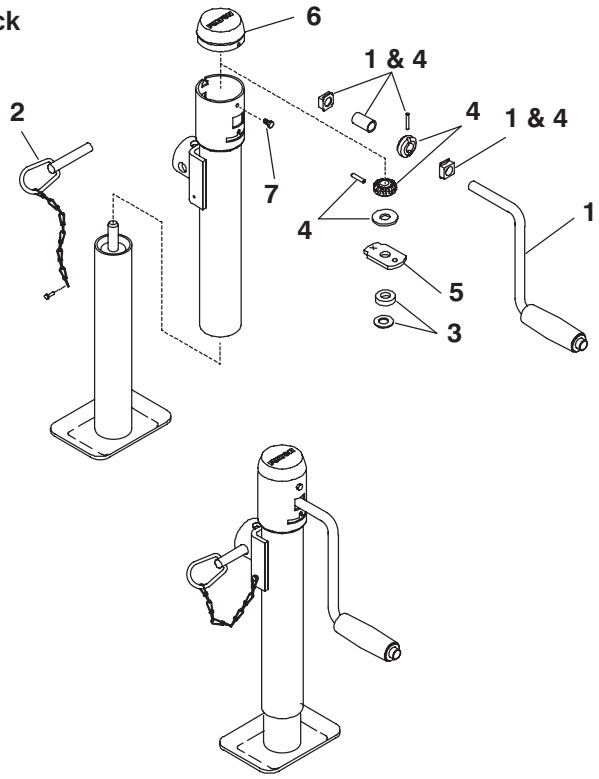

Ref. No.	Part No.	Description	Qty. Req.
	143470	HITCHJACK - FULTON	1
		CONSISTS OF:	
01	143597	HANDLE	1
02	143601	PIN & CHAIN	1
03	143610	KIT/BEARING	1
04	143602	KIT/GEAR	1
05	143600	PLATE/SUPPORT	1
06	143598	CAP/TUBE	1
07	113026	TFS #8-32X3/8	2

156411 Bale Ramps

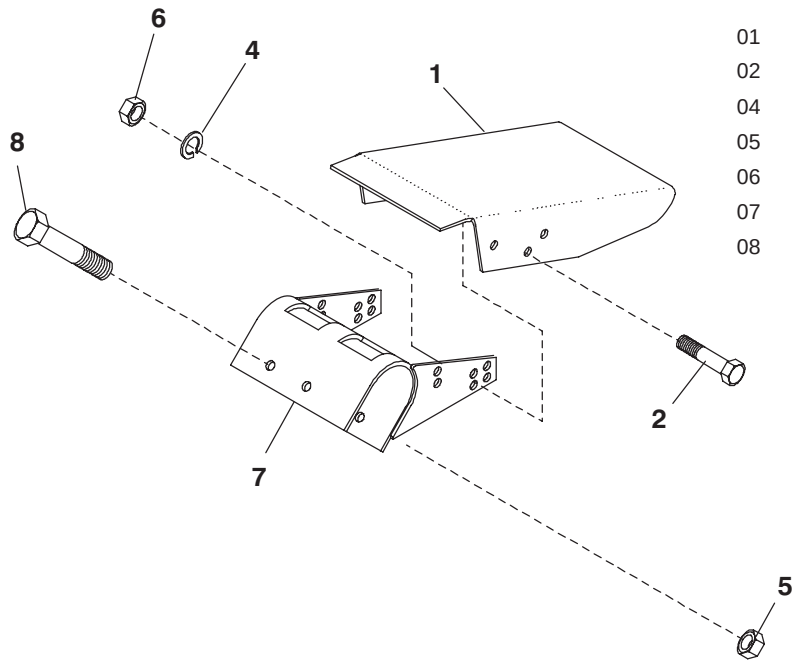

Ref. No.	Part No.	Description	Qty. Req.
	156411	KIT/BALE RAMPS	1
		CONSISTS OF:	
01	076568	RAMP	2
02	650495	CS 1/2X1-1/4	8
04	654030	LW 1/2	8
05	071706	LN 1/2	4
06	653018	HN 1/2	8
07	088854	ANCHOR/RAMP ASSY	2
08	650496	CS 1/2X5	4

142963 Shuttle Return Kit

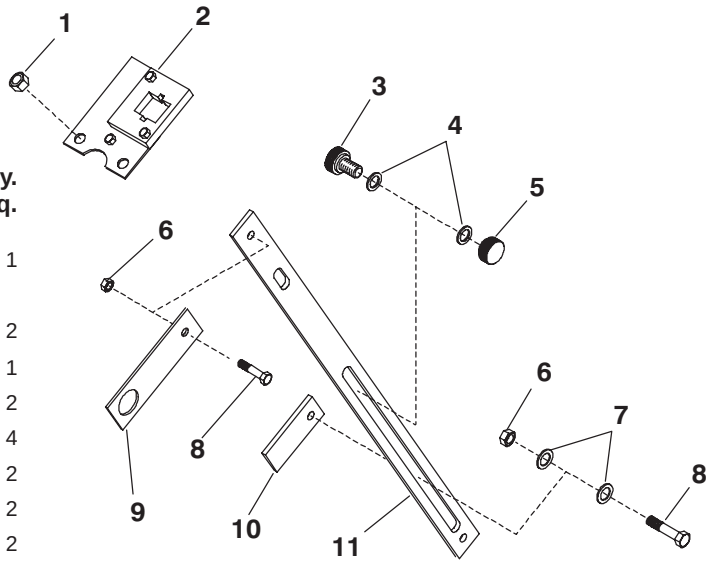

Ref. No.	Part No.	Description	Qty. Req.
	142963	SHUTTLE RETURN KIT	1
		CONSISTS OF:	
01	653018	HN 1/2	2
02	NS[a]	SWITCH/ASSY	1
03	141082	MAGNET/ASSY	2
04	141526	WASHER/NYLON 1/2	4
05	141077	NUT/MAGNET	2
06	067847	NILN 3/8	2
07	654006	FW 3/8	2
08	650490	CS 3/8X1	2
09	141070	PLATE	1
10	141525	DAMPENER	1
11	141229	SLIDE	1

a) Not available as a service part. Refer to the parts breakdown on page entitled 'Automatic Twine Wrap'.

806496 Pickup Lift Kit

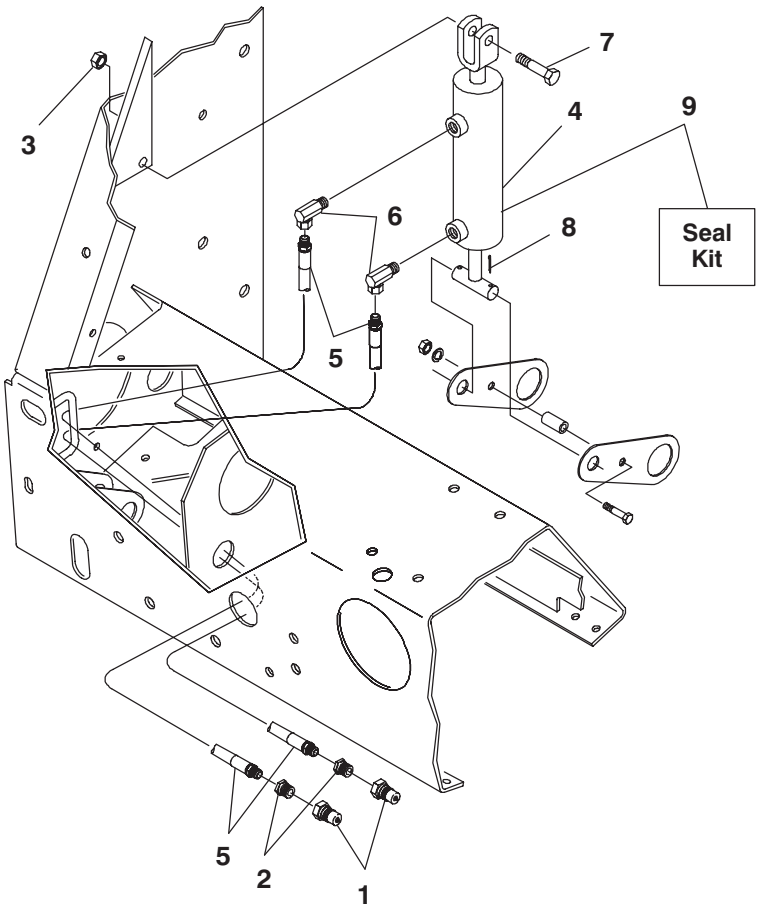

Ref. No.	Part No.	Description	Qty. Req.	Ref. No.	Part No.	Description	Qty. Req.
01	056080	QUICK-DISCONNECT (MALE)	2	06	580049	ELBOW/HYD FITTING 90 DEG	2
02	057655	BUSHING/HYD FITTING	2	07	650569	CS 1/2X1-3/4	1
03	071706	LN 1/2	1	08	126845	CP 3/32X1-1/4	2
04	118398	CYLINDER/PICKUP	1	09	120826	KIT/SEAL	1
05	118633	HOSE/ASSY	2				

806492 Crowder Wheel Kit

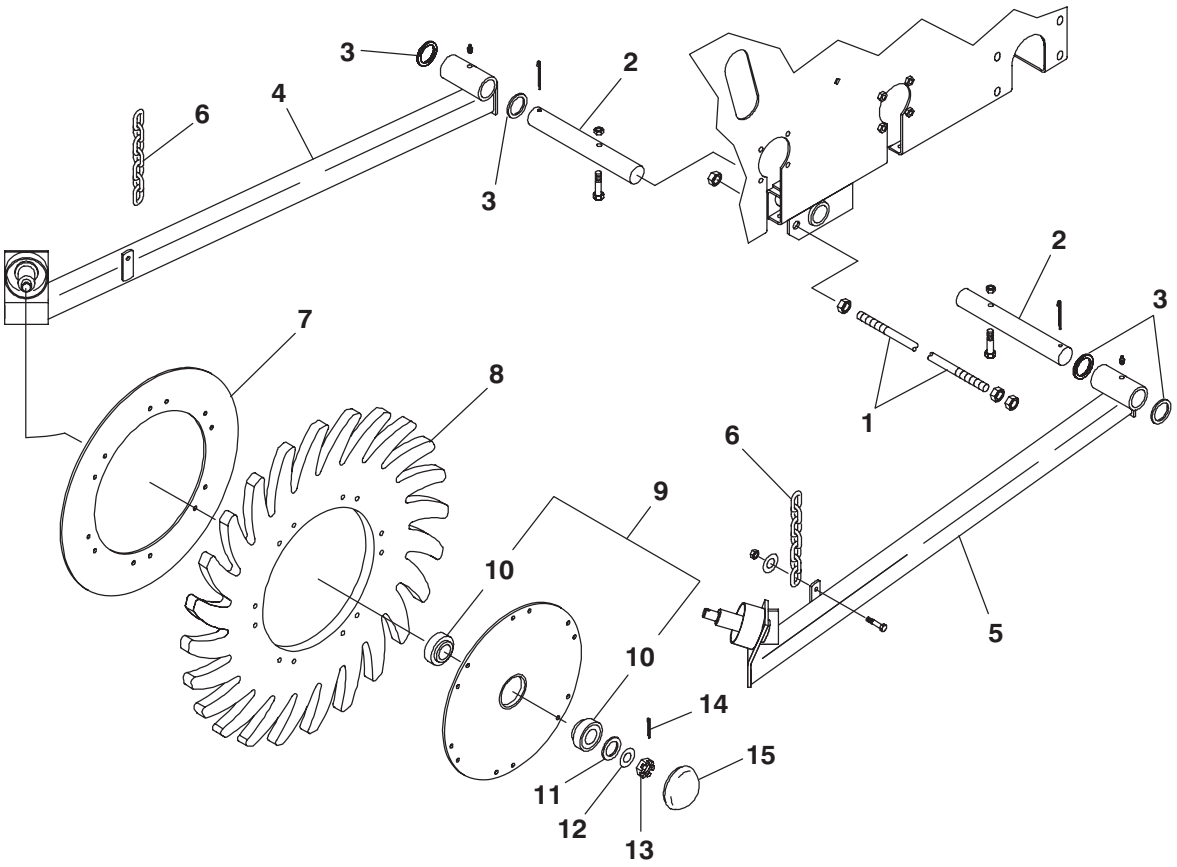

Ref. No.	Part No.	Description	Qty. Req.
01	119435	ROD (RB1475 ONLY)	1
	119436	ROD (RB1875 ONLY)	1
02	119288	SHAFT/ARM PIVOT	2
03	057617	FW 1-1/2	4
03	057617	FW 1-1/2	4
04	119362	ARM/CROWDER RT ASSY	1
05	119363	ARM/CROWDER LT ASSY	1
06	060469	CHAIN/LOWER LINK	2
07	072627	BACKUP/RUBBER WHEEL	2
08	073234	WHEEL/RUBBER	2
09	072641	HUB/WHEEL ASSY	2
10	520064	BEARING/BALL	4
11	B11162B	FW 1-17/64	4
12	072660	WASHER/BELLEVILLE	2
13	653119	NUT/HEX SLTD 3/4	2
14	655018	PIN/COTTER 3/16X1-1/4	2
15	064415	CAP/DUST	2

142965 Safety Tow Chain 5 Ton

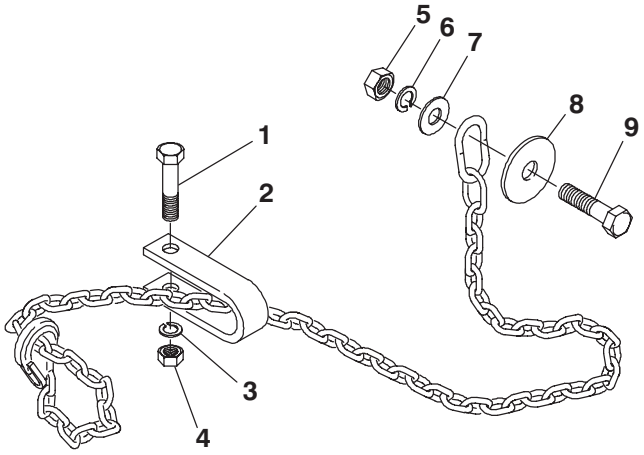

Ref. No.	Part No.	Description	Qty. Req.
	142965	CHAIN/SAFETY TOW 5 TON	1
		CONSISTS OF:	
01	650695	CS 5/8X3-1/2	1
02	080894	CLEVIS	1
03	654032	LW 5/8	1
04	653021	N 5/8	1
05	653026	N 3/4	1
06	654034	LW 3/4	1
07	654014	FW 3/4	1
08	069076	FW 25/32	1
09	650172	CS 3/4X3-1/4	1

068633 Packing Roll Lagging Kit

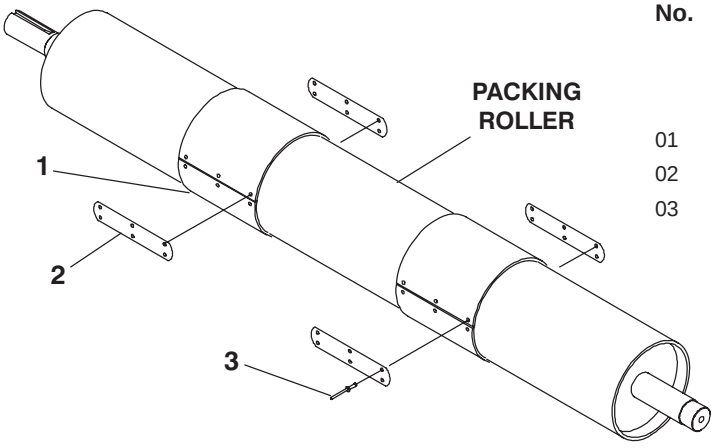

Ref. No.	Part No.	Description	Qty. Req.
	068633	PACKING ROLL LAGGING KIT	1
		CONSISTS OF:	
01	068847	LAGGING	2
02	068848	STRIP/COVER	4
03	068846	RIVET/LINER	36

802700 Lacing Kit

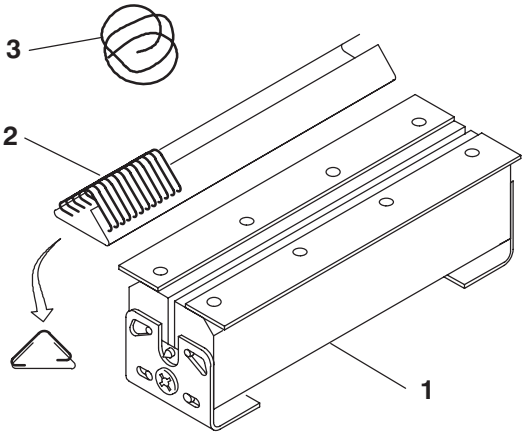

Ref. No.	Part No.	Description	Qty. Req.
01	115666	VISE/7 INCH	1
	073390	KIT/RELACING	1
		CONSISTS OF:	
02	058398	LACING/BELT	6
03	078113	CABLE/LACING	1

119894 Chain Oiler

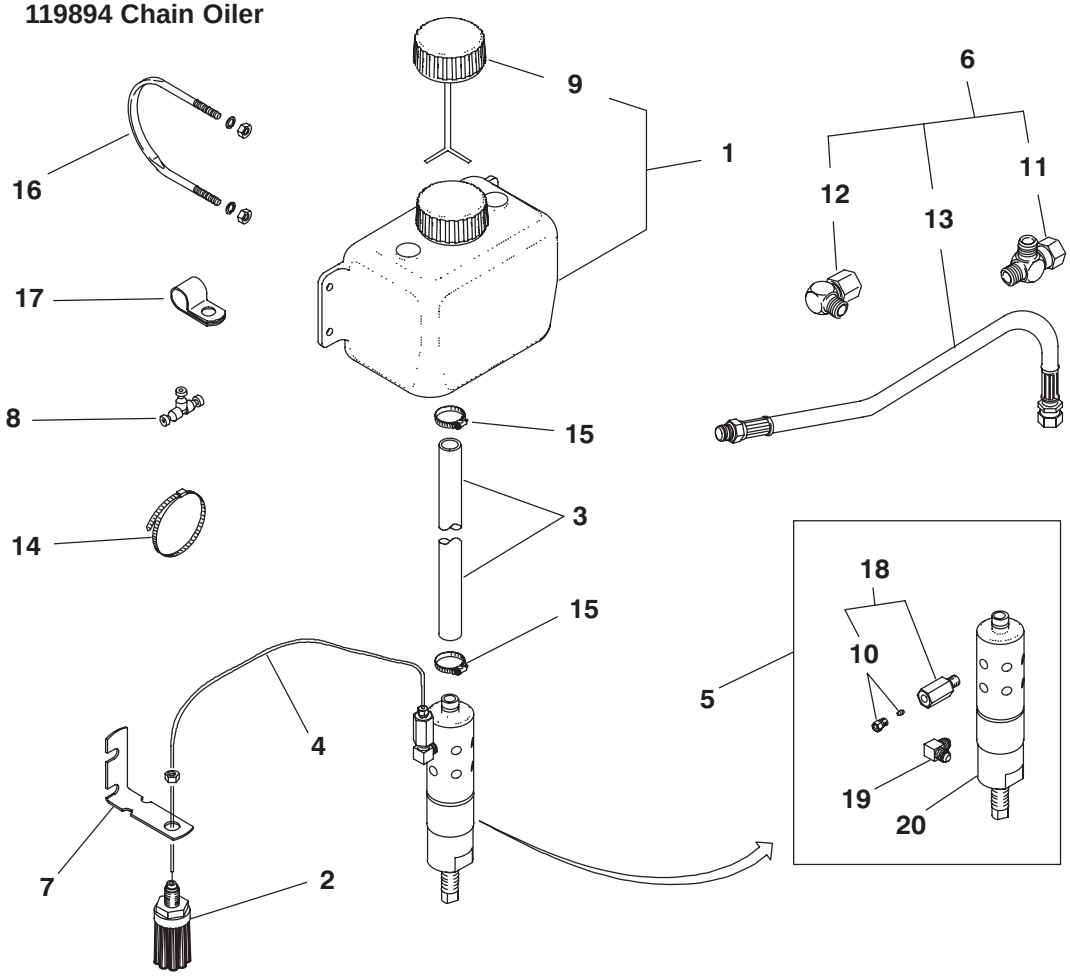

Ref. No.	Part No.	Description	Qty. Req.
	119894	OILER/CHAIN	1
		CONSISTS OF:	
01	091209	TANK/OIL	1
02	091210	BRUSH/ASSY	5
03	091213	TUBE	1
04	091219	TUBE/NYLON	1
05	119893	PUMP/OILER	1
06	119905	HOSE/HYDRAULIC	1
07	119906	BRACKET/90° LONG BRUSH	5
08	119907	UNION TEE 5/32	1
09	112269	CAP	1
10	119565	KIT/VALVE	1
11	072806	TEE	1
12	119909	ELBOW	1
13	119910	HOSE	1
14	055648	TIE/WIRE	15
15	075665	CLAMP/HOSE	2
16	091216	U-BOLT	1
17	119582	CLAMP	3
18	119564	MANIFOLD	4
19	056997	ELBOW	4
20	158044	PUMP	1

INCLUDES THE FOLLOWING HARDWARE:

650294	TFS 1/4X3/8	1
650403	CS 1/4X3/8	2
650448	CS 1/4X3/4	2
650758	CB 1/4X3/4	4
653005	HN 1/4	6
653007	HN 5/16	4
653010	HN 3/8	1
653018	HN 1/2	5
654002	FW 1/4	8
654022	LW 1/4	8
654024	LW 5/16	2

806497 Audible Alarm Kit

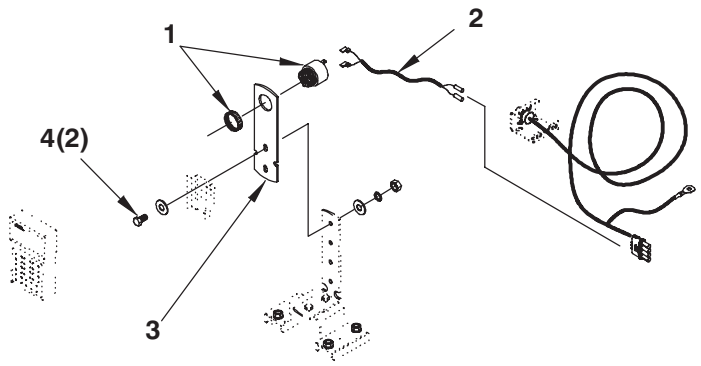

Ref. No.	Part No.	Description	Qty. Req.
01	119873	ALARM/AUDIO	1
02	119875	HARNESS/ALARM	1
03	119874	BRACKET/ALARM	1
04	650835	CS 1/4X1	2

141532 Idler Assembly

Ref. No.	Part No.	Description	Qty. Req.
	141532	IDLER ASSY	1
		CONSISTS OF:	
01	118169	RUBBER	1
02		IDLER	1
03	117995	MAGNET	2

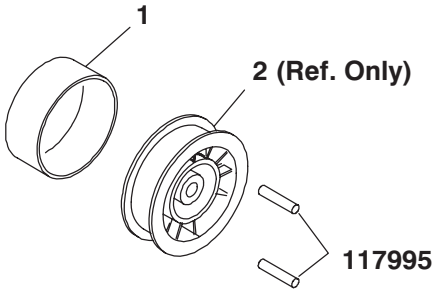

Left Twine Sensor Harness

Right Twine Sensor Harness

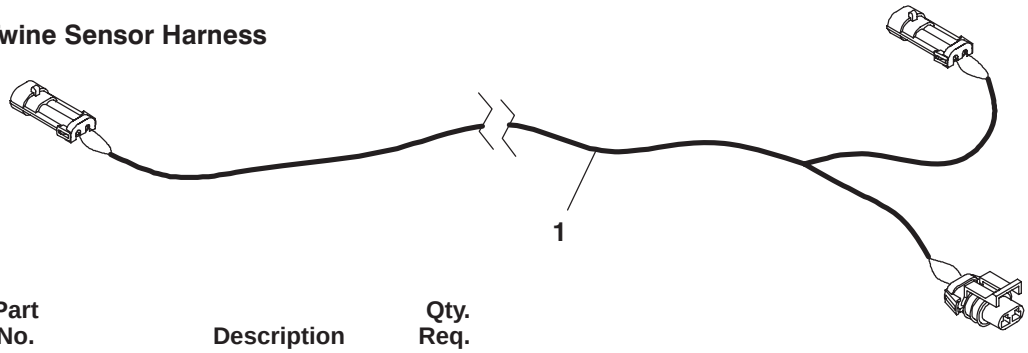

Ref. No.	Part No.	Description	Qty. Req.
01	141460	HARNESS/JUMPER	1

Left Twine Sensor

QW1400/1800 - ROLLERS & BRACKETS

Outside Diameter of Rod #32 should be .75" to 1.00" from 16" Roller Rods Min.
Both Tailgate Arms should be in the same gauge hole.

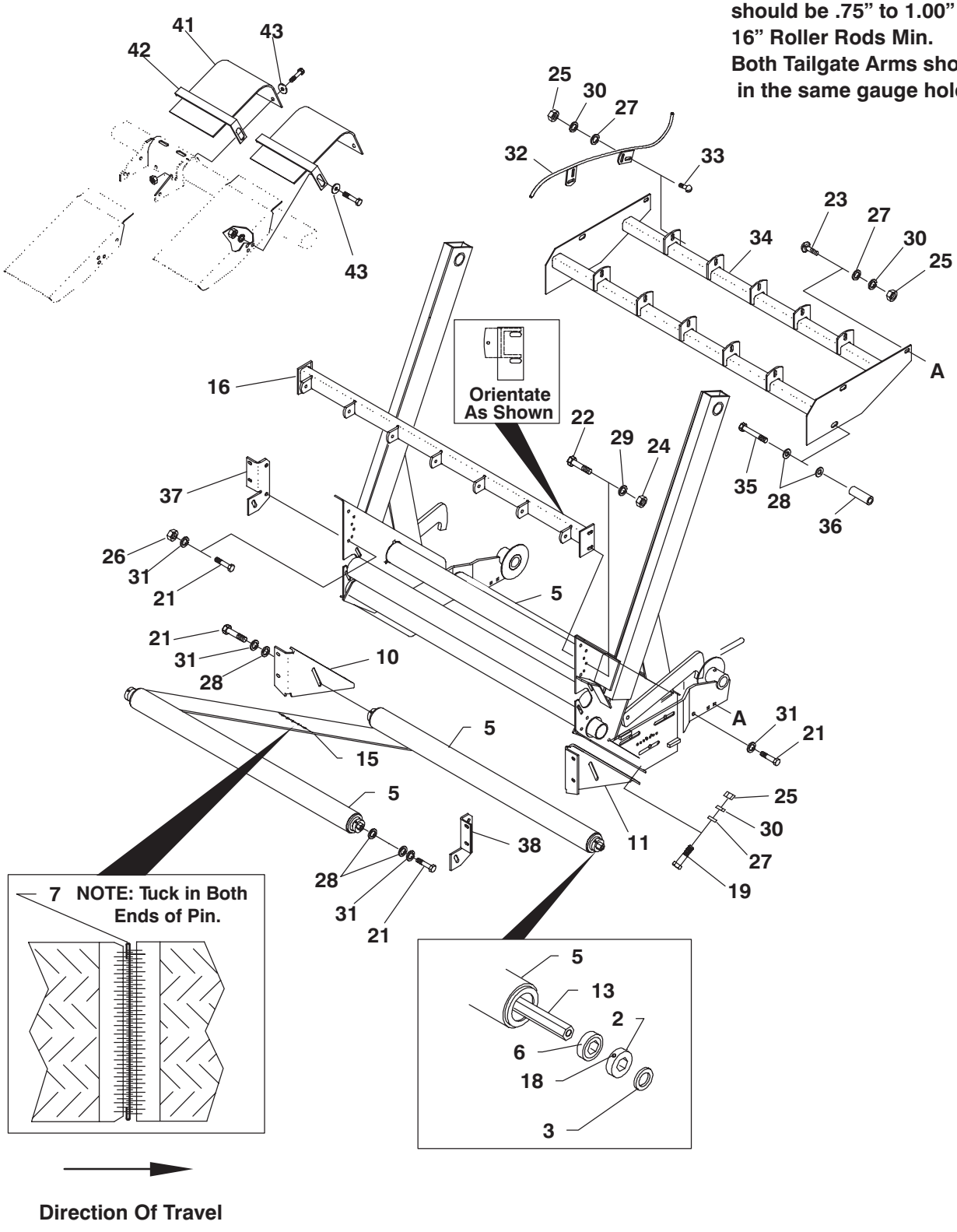

Ref. No.	Part No.	Description	Qty. Req.
02	048995	COLLAR/SET	6
03	058138	FW 17/32	12
05	084628	ROLL/BALE STARTER ASSY (QW1400)	3
	125644	ROLL/QUICK WRAP (QW1800)	3
06	084630	BEARING/.88 HEX	6
07	094104	PIN/BELT CABLE	6
10	111303	BRACE/LT (QW1400)	1
	125639	BRACE/LT (QW1800)	1
11	111323	BRACE/RT (QW1400)	1
	125638	BRACE/RT (QW1800)	1
13	124197	SHAFT/HEX (QW1400)	3
	125637	SHAFT/HEX (QW1800)	3
15	118659	FEEDER BELT (QW1400) (INCL. 7)	6
	118660	FEEDER BELT (QW1800) (INCL. 7)	8
16	124751	GUIDE/BELT ASSY (QW1400)	1
	125664	GUIDE/BELT ASSY (QW1800)	1
18	650197	SHSS CP 1/4X3/8	12
19	650490	CS 3/8X1	6
21	650495	CS 1/2X1–1/4	10
22	650573	CB 5/16X1	4
23	650786	CB 3/8X1-1/4	2
24	653007	HN 5/16	4
25	653010	HN 3/8 (QW1400)	18
		HN 3/8 (QW1800)	22
26	653018	HN 1/2	4
27	654006	FW 3/8 (QW1400)	18
		FW 3/8 (QW1800)	20
28	654009	FW 1/2	14
29	654024	LW 5/16	4
30	654026	LW 3/8 (QW1400)	18
		LW 3/8 (QW1800)	22
31	654030	LW 1/2	10
32	112969	GUIDE ASSY (QW1400)	5
	112959	ASSY/FEEDER FINGER (QW1800)	7
33	650704	CB 3/8X1 (QW1400)	10
		CB 3/8X1 (QW1800)	14
34	119883	BRACKET/MTG ASSY (QW1400)	1
	119881	BRACKET/MTG ASSY (QW1800)	1
35	650644	CS 1/2X3	4
36	3E136	SPACER/TIGHTENER PULLEY	4
37	113154	BRACKET/MOUNTING LT	1
38	113158	BRACKET/MOUNTING RT	1
41	125120	SHIELD/RAMP	2
42	125918	STRAP/HOLD DOWN	2
43	654009	FW 1/2	8

QW1400/1800 - RIGHT SIDE ASSEMBLY

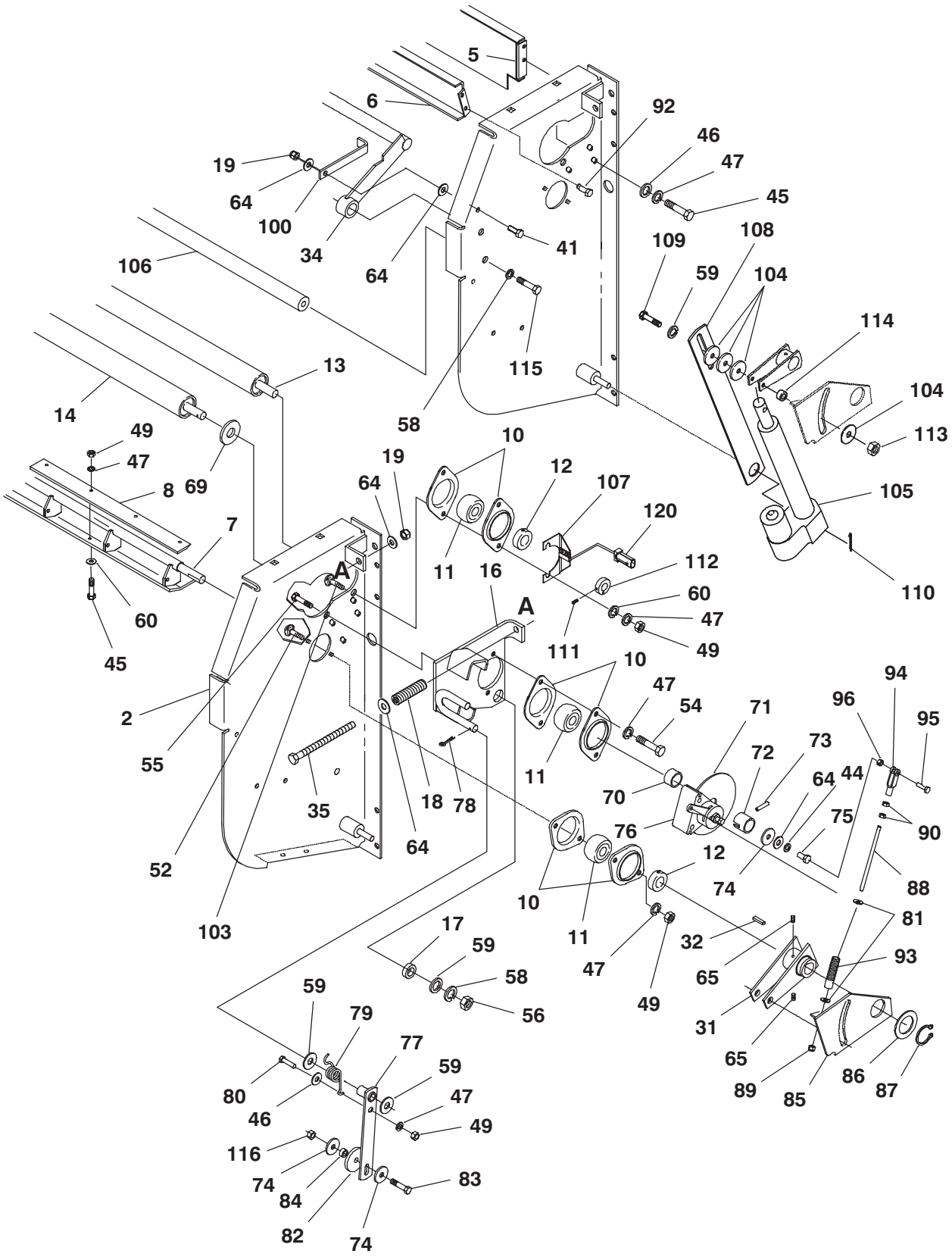

Ref. No.	Part No.	Description	Qty. Req.
01	119359[a]	PANEL ASSY/LT	1
02	119360[a]	PANEL ASSY/RT	1
03	099198	PANEL/FRONT ASSY (QW1400)	1
	125634	PANEL/FRONT ASSY (QW1800)	1
05	125926	GUIDE/FRONT ASSY (QW1400)	1
	125950	GUIDE/FRONT ASSY (QW1800)	1
06	113396	GUIDE/REAR ASSY (QW1400)	1
	113399	GUIDE/REAR ASSY (QW1800)	1
07	113390	HOLDER/BLADE ASSY (QW1400)	1
	113392	HOLDER/BLADE ASSY (QW1800)	1
08	099197	BLADE (QW1400)	2
	125646	BLADE (QW1800)	2
09	099190	PLATE/COVER	1
10	B11335	RETAINER/BEARING	12
11	520063	BEARING/BALL	6
12	520084	COLLAR/BEARING	5
13	118163	ROLL/IDLER ASSY (QW1400)	1
	118162	ROLL/IDLER ASSY (QW1800)	1
14	113378	ROLL/DRIVE ASSY (QW1400)	1
	113379	ROLL/DRIVE ASSY (QW1800)	1
15	099134	PLATE/BEARING LT	1
16	120866	ANCHOR	1
17	099153	SPACER	2
18	111330	SPRING	2
19	067847	NILN 3/8	3
20	113385	SPROCKET ASSY	1
21	111324	BEARING/THRUST	2
22	076161	RING/RETAINING	2
23	113376	ASSY/SPROCKET	1
25	125124	IDLER/ASSY	1
26	113384	SPROCKET ASSY	1
30	066770	CHAIN/ROLLER	2
31	112599	ARM	1
32	180-17243	KEY	2
33	076090	SPRING/EXTENSION	1
34	112993	BAR/REWRAP ASSY (QW1400)	1
	112988	BAR/REWRAP ASSY (QW1800)	2
35	076846	BOLT/HEX TAP	2
36	119350	BAR/REWRAP ASSY (QW1400 ONLY)	1
38	400-32443	FW 25/32	4
39		COMPOUND/ANTI-SEIZE	
41	650490	CS 3/8X1	3
43	653010	HN 3/8	3
44	654026	LW 3/8	6
45	650487	CS 5/16X1 (QW1400)	14
		CS 5/16X1 (QW1800)	16
46	650810	FW 5/16	5
47	654024	LW 5/16 (QW1400)	33
		LW 5/16 (QW1800)	35
49	653007	HN 5/16 (QW1400)	26
		HN 5/16 (QW1800)	28
52	650687	CB 5/16X3/4	7
54	650484	CS 5/16X1/2	4
55	650495	CS 1/2X1-1/4	2
56	653018	HN 1/2	4
58	654030	LW 1/2	6
59	654009	FW 1/2	8
60	654004	FW 5/16 (QW1400)	13
		FW 5/16 (QW1800)	15
61	650488	CS 3/8X3/4 (QW1800 ONLY)	1
62	057864	PIN/SPRING	2
63	650704	CB 3/8X1	3
64	654006	FW 3/8	10
65	650195	SHSS 1/4X1/4	2
68	6H154	FW 25/32	3
69	112980	WASHER	1
70	112982	SPACER	1
71	112979	DISC	1
72	112985	SPACER	1
73	040775	PIN/SPRING	1
74	048028	FW 13/32	3
75	650488	CS 3/8X3/4	1
76	072186[b]	BRAKE/RT	1
77	127133	STRAP	1
78	651159	CP 3/32X1	1
79	B11108B	SPRING/ECC FOLLOWER	1
80	650486	CS 5/16X3/4	1
81	654002	FW 1/4	2
82	113140	WASHER/THREADED	1
83	650533	CS 3/8X1-1/2	1
84	091716	SPACER	1
85	112832	ASSY/PIVOT	1
86	081017	FW SPECIAL	1
87	051904	RING/RETAINING	1
88	112831	ROD/ADJUSTMENT	1
89	121002	NILN 1/4	1
90	650546	HN 1/4	2
91	650213	SHSS 3/8X3/8	2
92	650985	TFS 5/16X3/4	4
93	056227	SPRING/COMPRESSION	1
94	072918	YOKE	1
95	650835	CS 1/4X1	1
96	071700	LN 1/4	1
97	070764	TUBE/CYLINDER TRIP ARM	2
98	650502	CS 1/2X2-1/4	2
99	061858	EYE BOLT/LATCH	1
100	112992	LOCK	1
102	H6077	SPACER/UNIV DR GUARD	1
103	650573	CB 5/16X1	2
104	057557	FW 17/32	4
105	126236[c]	ACTUATOR	1
106	124680	ROD/NET TENSION (QW1400)	1
	125905	ROD/NET TENSION (QW1800)	1
107	112586	PINCH COUNT SWITCH	1
108	125249	ARM/STOP	1
109	117955	BOLT/SPECIAL	1
110	650878	CP 5/32X1	1
111	650199	SHSS 1/4X1/2	1
112	118517	RING	1
113	068034	NILN 1/2	1
114	068542	SPACER	1
115	650494	CS 1/2X1	2
116	071703	LN 3/8	1
120	112423	SWITCH	1

a) Includes 093457 Warning Decal.
b) For replacement Brake Pad order 073693.
c) See Actuator breakdown for further details.

QW1400/1800 - LEFT SIDE ASSEMBLY

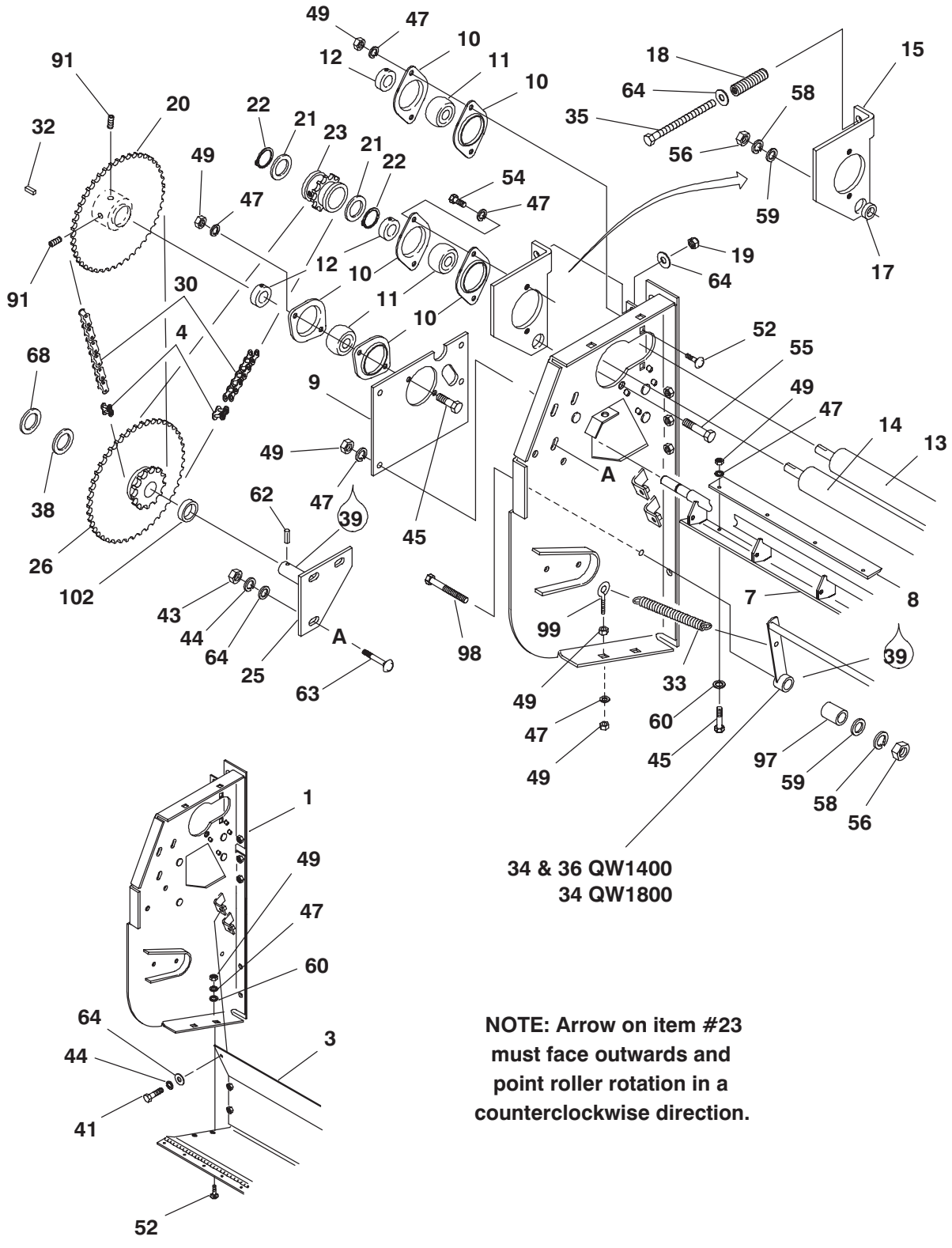

NOTE: Arrow on item #23 must face outwards and point roller rotation in a counterclockwise direction.

Ref. No.	Part No.	Description	Qty. Req.
01	119359[a]	PANEL/LT ASSY	1
02	119360[a]	PANEL/RT ASSY	1
03	099198	PANEL/FRONT ASSY (QW1400)	1
	125634	PANEL/FRONT ASSY (QW1800)	1
04	500037	LINK/CONNECTOR	2
05	125926	GUIDE/FRONT ASSY (QW1400)	1
	125950	GUIDE/FRONT ASSY (QW1800)	1
06	113396	GUIDE/REAR ASSY (QW1400)	1
	113399	GUIDE/REAR ASSY (QW1800)	1
07	113390	HOLDER/BLADE ASSY (QW1400)	1
	113392	HOLDER/BLADE ASSY (QW1800)	1
08	099197	BLADE (QW1400)	2
	125646	BLADE (QW1800)	2
09	099190	PLATE/COVER	1
10	B11335	RETAINER/BEARING	12
11	520063	BEARING/BALL	6
12	520084	COLLAR/BEARING	5
13	118163	ROLL/IDLER ASSY (QW1400)	1
	118162	ROLL/IDLER ASSY (QW1800)	1
14	113378	ROLL/DRIVE ASSY (QW1400)	1
	113379	ROLL/DRIVE ASSY (QW1800)	1
15	099134	PLATE/BEARING LT	1
16	120866	ANCHOR/ASSY	1
17	099153	SPACER	2
18	111330	SPRING	2
19	067847	NILN 3/8	3
20	113385	SPROCKET ASSY	1
21	111324	BEARING/THRUST	2
22	076161	RING/RETAINING	2
23	113376	ASSY/SPROCKET	1
25	125124	IDLER/ASSY	1
26	113384	SPROCKET ASSY	1
30	066770	CHAIN/ROLLER	2
31	112599	ARM ASSY	1
32	180-17243	KEY	2
33	076090	SPRING/EXTENSION	1
34	112993	BAR/REWRAP ASSY (QW1400)	1
	112988	BAR/REWRAP ASSY (QW1800)	2
35	076846	BOLT/HEX TAP	2
36	119350	BAR/REWRAP ASSY (QW1400)	1
38	400-32443	FW 25/32	4
39		COMPOUND/ANTI-SEIZE	
41	650490	CS 3/8X1	3
43	653010	HN 3/8	3
44	654026	LW 3/8	6
45	650487	CS 5/16X1 (QW1400)	14
		CS 5/16X1 (QW1800)	16
46	650810	FW 5/16	5
47	654024	LW 5/16 (QW1400)	33
		LW 5/16 (QW1800)	35
49	653007	HN 5/16 (QW1400)	26
		HN 5/16 (QW1800)	28
52	650687	CB 5/16X3/4	7
54	650484	CS 5/16X1/2	4
55	650495	CS 1/2X1-1/4	2
56	653018	HN 1/2	4
58	654030	LW 1/2	6
59	654009	FW 1/2	8
60	654004	FW 5/16 (QW1400)	13
		FW 5/16 (QW1800)	15
61	650488	CS 3/8X3/4 (QW1800 ONLY)	1
62	057864	PIN/SPRING	2
63	650704	CB 3/8X1	3
64	654006	FW 3/8	11
65	650195	SHSS 1/4X1/4	2
68	6H154	FW 25/32	3
69	112980	WASHER	1
70	112982	SPACER	1
71	112979	DISC	1
72	112985	SPACER	1
73	040775	PIN/SPRING	1
74	048028	FW 13/32	3
75	650488	CS 3/8X3/4	1
76	072186[b]	BRAKE/RT	1
77	127133	STRAP	1
78	651159	CP 3/32X1	1
79	B11108B	SPRING/ECC FOLLOWER	1
80	650486	CS 5/16X3/4	1
81	654002	FW 1/4	2
82	113140	WASHER/THREADED	1
83	650533	CS 3/8X1-1/2	1
84	091716	SPACER	1
85	112832	PIVOT ASSY	1
86	081017	FW SPECIAL	1
87	051904	RING/RETAINING	1
88	112831	ROD/ADJUSTMENT	1
89	121002	NILN 1/4	1
90	650546	HN 1/4	2
91	650213	SHSS 3/8X3/8	2
92	650985	TFC 5/16X3/4	4
93	056227	SPRING/COMPRESSION	1
94	072918	YOKE	1
95	650835	CS 1/4X1	1
96	071700	LN 1/4	1
97	070764	TUBE/CYLINDER TRIP ARM	2
98	650502	CS 1/2X2-1/4	2
99	061858	EYE BOLT/LATCH	1
100	112992	LOCK	1
102	H6077	SPACER/UNIV DR GUARD	1
103	650573	CB 5/16X1	2
104	057557	FW 17/32	4
105	126236[c]	ACTUATOR	1
106	124680	ROD/NET TENSION (QW1400)	1
	125905	ROD/NET TENSION (QW1800)	1
107	112586	SWITCH/PINCH COUNT	1
108	125249	ARM/STOP	1
109	117955	BOLT/SPECIAL	1
110	650878	CP 5/32X1	1
111	650199	SHSS 1/4X1/2	1
112	118517	RING	1
113	068034	NILN 1/2	1
114	068542	SPACER	1
115	650494	CS 1/2X1	2
116	071703	LN 3/8	1
120	112423	SWITCH	1

a) Includes 093457 Warning Decal.
b) For replacement Brake Pad order 073693.
c) See Actuator breakdown for further details.

QW1400/1800 - SHIELDS, CONTROL BOX & HARNESS

NOTE:

1. To Install Shield (Ref #10) Fit Lower Lip Inside Shield Below It.
2. Mount Hinges so that Side Side Doors Only Open 90 Degrees.

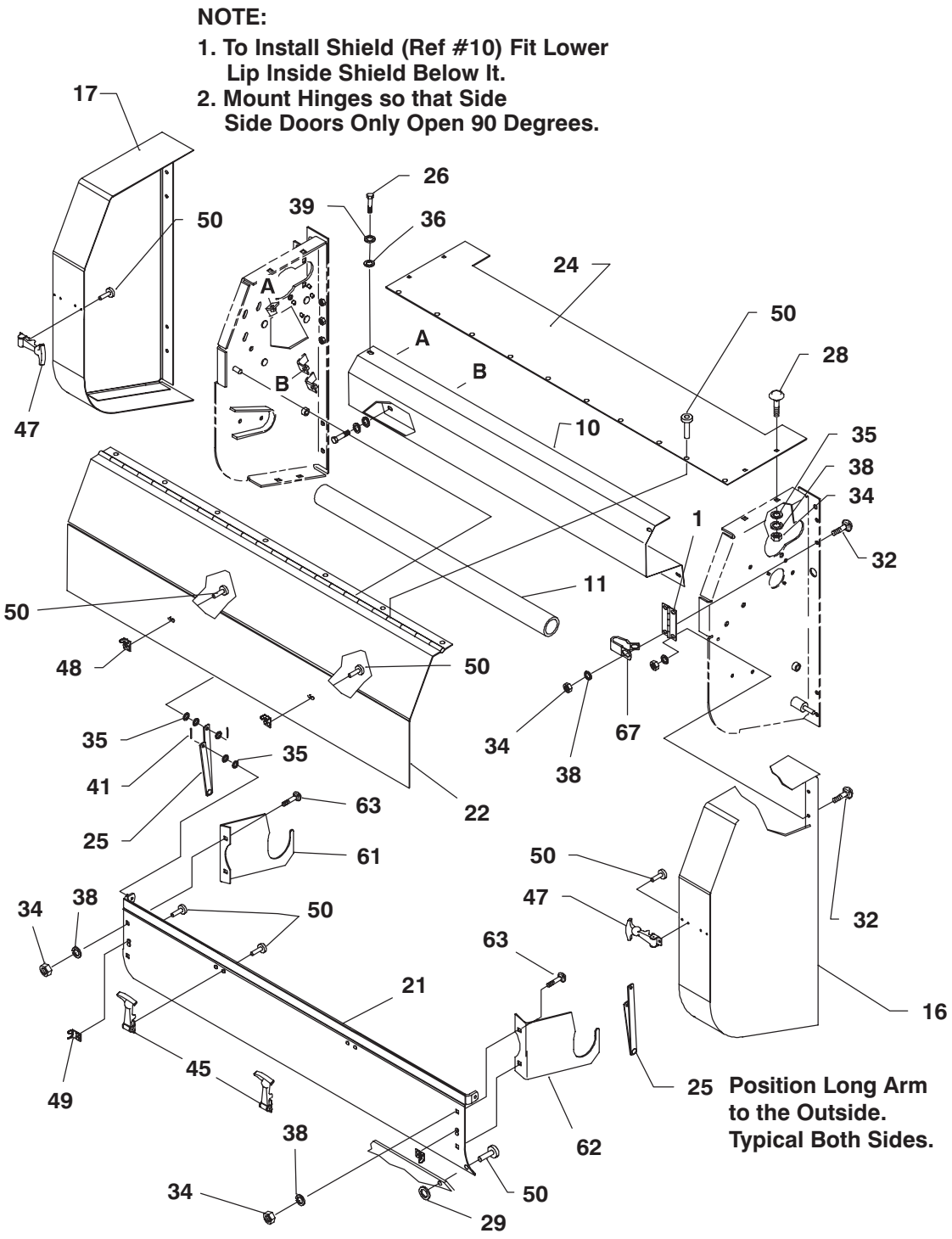

Ref. No.	Part No.	Description	Qty. Req.
01	046677	HINGE	4
03	055648	TIE/WIRE (QW1400)	5
		TIE/WIRE (QW1800)	4
05	076078	CLAMP/WIRE (AFTER SN25000-1475 & 17900-1875)	3
	061062	CLAMP/WIRE (BEFORE SN25001-1475 & 17901-1875)	4
07	125947	GROMMET	1
10	112837	PANEL/ACCESS (QW1400)	1
	112854	PANEL/ACCESS (QW1800)	1
11	117026	PIPE (QW1400)	1
	125647	PIPE/PVC (QW1800)	1
14	112291[a]	EXTENSION/NET WRAP	1
16	112809	SHIELD/RT	1
17	118159	SHIELD LT	1
21	125473	TAILGATE/ASSY (QW1400)	1
	125673	TAILGATE ASSY (QW1800)	1
22	126212	SHIELD/FRONT ASSY (QW1400)	1
	125669	SHIELD/FRONT ASSY (QW1800)	1
24	126214	SHIELD/TOP (QW1400)	1
	125672	SHIELD/TOP (QW1800)	1
25	125488	HINGE/TAILGATE	2
26	650490	CS 3/8X1	4
28	650687	CB 5/16X3/4	4
29	650584	FW #10 (QW1400)	7
		FW #10 (QW1800)	9
32	650949	THMS 5/16X3/4	16
34	653007	HN 5/16	24
35	654004	FW 5/16	14
36	654006	FW 3/8	12
38	654024	LW 5/16	24
39	654026	LW 3/8	12
41	655001	CP 1/16X3/4	4
45	080648	LATCH/RUBBER	2
47	125266	LATCH/RUBBER	2
48	081087	KEEPER/LATCH	2
49	125267	KEEPER/RUBBER LATCH	2
50	079187	RIVET/BLIND (QW1400)	30
		RIVET/BLIND (QW1800)	34
52	650491	CS 3/8X1-1/4	8
53	650618	TFS 5/16X5/8	3
61	117988	PIVOT/NET ROLL RT	1
62	117989	PIVOT/NET ROLL LT	1
63	650573	CB 5/16X1	4
66	056773	CLAMP/HOSE (AFTER SN25000-1475 & 17900-1875)	3
	048967	CLAMP/HOSE (BEFORE SN25001-1475 & 17901-1875)	2
67	059075	CLAMP/HOSE	1

a) For repair order connector kits 119923 & 119927.

QW1400/1800 - SHIELDS, CONTROL BOX & HARNESS

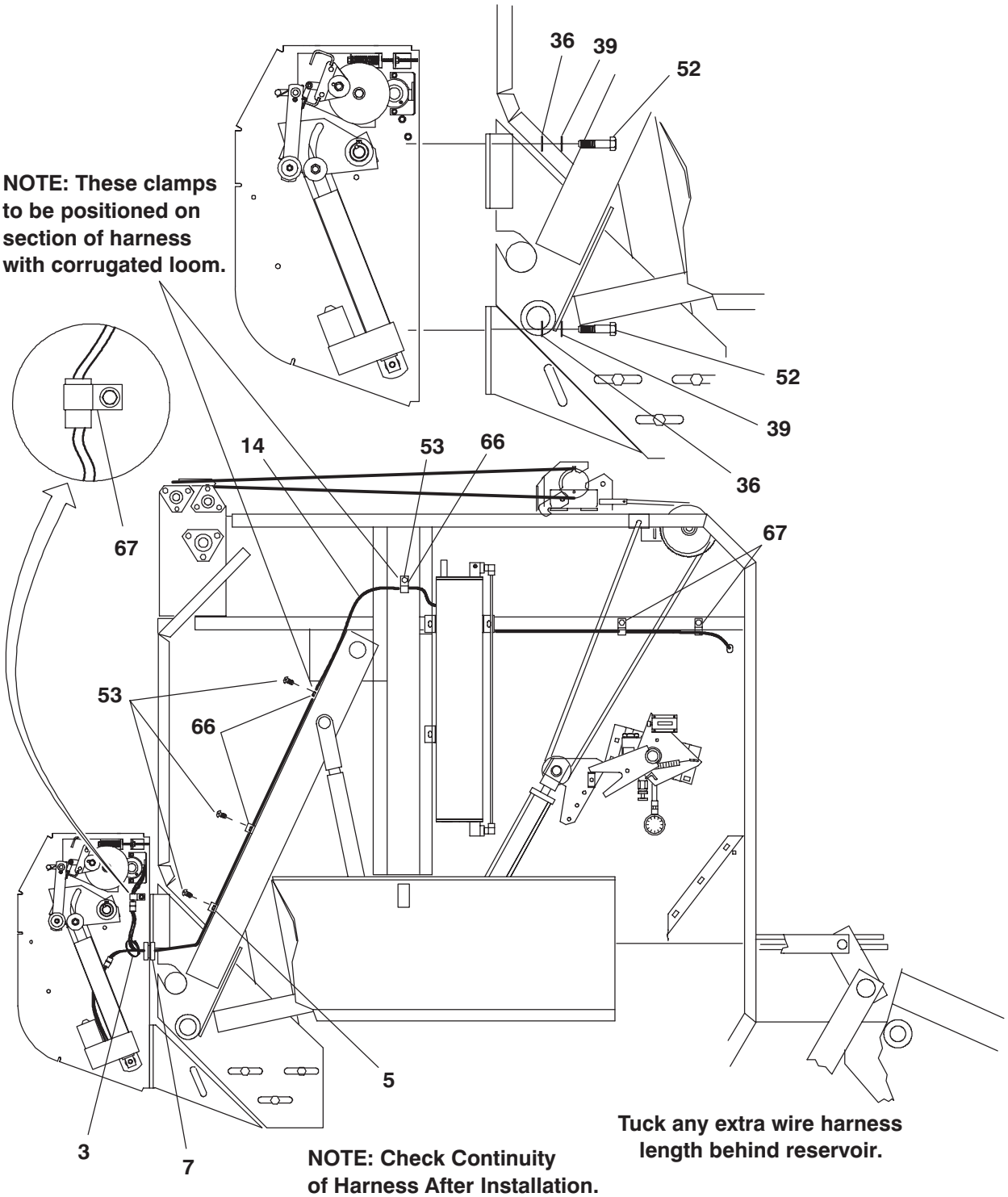

Ref. No.	Part No.	Description	Qty. Req.
01	046677	HINGE	4
03	055648	TIE/WIRE (QW1400)	5
		TIE/WIRE (QW1800)	4
05	076078	CLAMP/WIRE (AFTER SN25000-1475 & 17900-1875)	3
	061062	CLAMP/WIRE (BEFORE SN25001-1475 & 17901-1875)	4
07	125947	GROMMET	1
10	112837	PANEL/ACCESS (QW1400)	1
	112854	PANEL/ACCESS (QW1800)	1
11	117026	PIPE (QW1400)	1
	125647	PIPE/PVC (QW1800)	1
14	112291[a]	EXTENSION/NET WRAP	1
16	112809	SHIELD/RT	1
17	118159	SHIELD LT	1
21	125473	TAILGATE/ASSY (QW1400)	1
	125673	TAILGATE ASSY (QW1800)	1
22	126212	SHIELD/FRONT ASSY (QW1400)	1
	125669	SHIELD/FRONT ASSY (QW1800)	1
24	126214	SHIELD/TOP (QW1400)	1
	125672	SHIELD/TOP (QW1800)	1
25	125488	HINGE/TAILGATE	2
26	650490	CS 3/8X1	4
28	650687	CB 5/16X3/4	4
29	650584	FW #10 (QW1400)	7
		FW #10 (QW1800)	9
32	650949	THMS 5/16X3/4	15
34	653007	HN 5/16	24
35	654004	FW 5/16	14
36	654006	FW 3/8	12
38	654024	LW 5/16	24
39	654026	LW 3/8	12
41	655001	CP 1/16X3/4	4
45	080648	LATCH/RUBBER	2
47	125266	LATCH/RUBBER	2
48	081087	KEEPER/LATCH	2
49	125267	KEEPER/RUBBER LATCH	2
50	079187	RIVET/BLIND (QW1400)	30
		RIVET/BLIND (QW1800)	34
52	650491	CS 3/8X1-1/4	8
53	650618	TFS 5/16X5/8	3
61	117988	PIVOT/NET ROLL RH	1
62	117989	PIVOT/NET ROLL LH	1
63	650573	CB 5/16X1	4
66	056773	CLAMP/HOSE (AFTER SN25000-1475 & 17900-1875)	3
	048967	CLAMP/HOSE (BEFORE SN25001-1475 & 17901-1875)	2
67	059075	CLAMP/HOSE	3

a) For repair order connector kits 119923 & 119927.

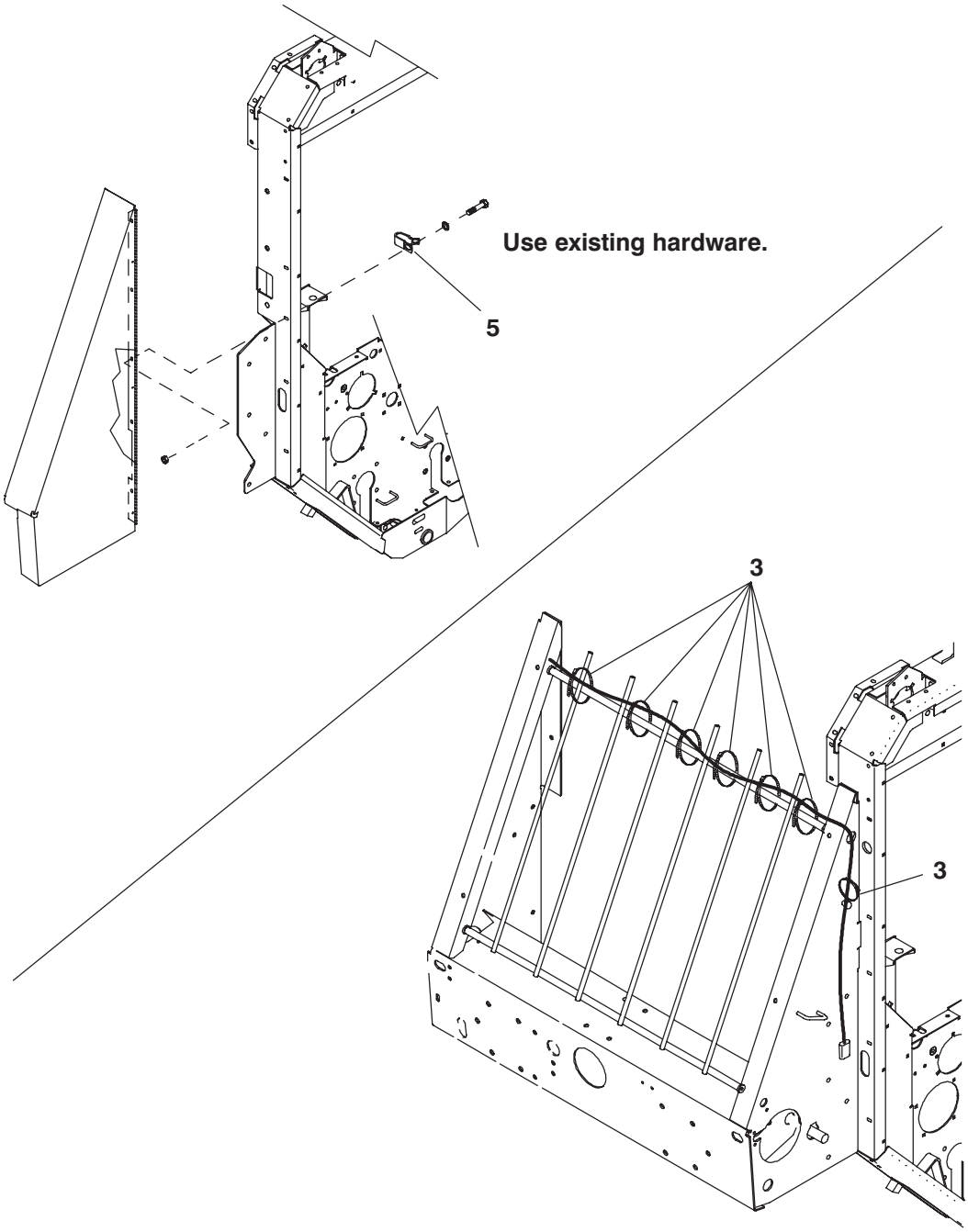

Ref. No.	Part No.	Description	Qty. Req.
03	055648	TIE/WIRE (QW1400)	5
		TIE/WIRE (QW1800)	4
05	076078	CLAMP/WIRE (AFTER SN25000-1475 & 17900-1875)	3
	061062	CLAMP/WIRE (BEFORE SN25001-1475 & 17901-1875)	4

141191 CONTACT KIT

1-Nickel Plated Contact Pins (6)
Gold Plated Contact Pins (2)
2-Sealing Plugs (4)
3-Contact Removal Tool
4-Nickel Plated Socket Contact (6)
Gold Plated Socket Contact (2)

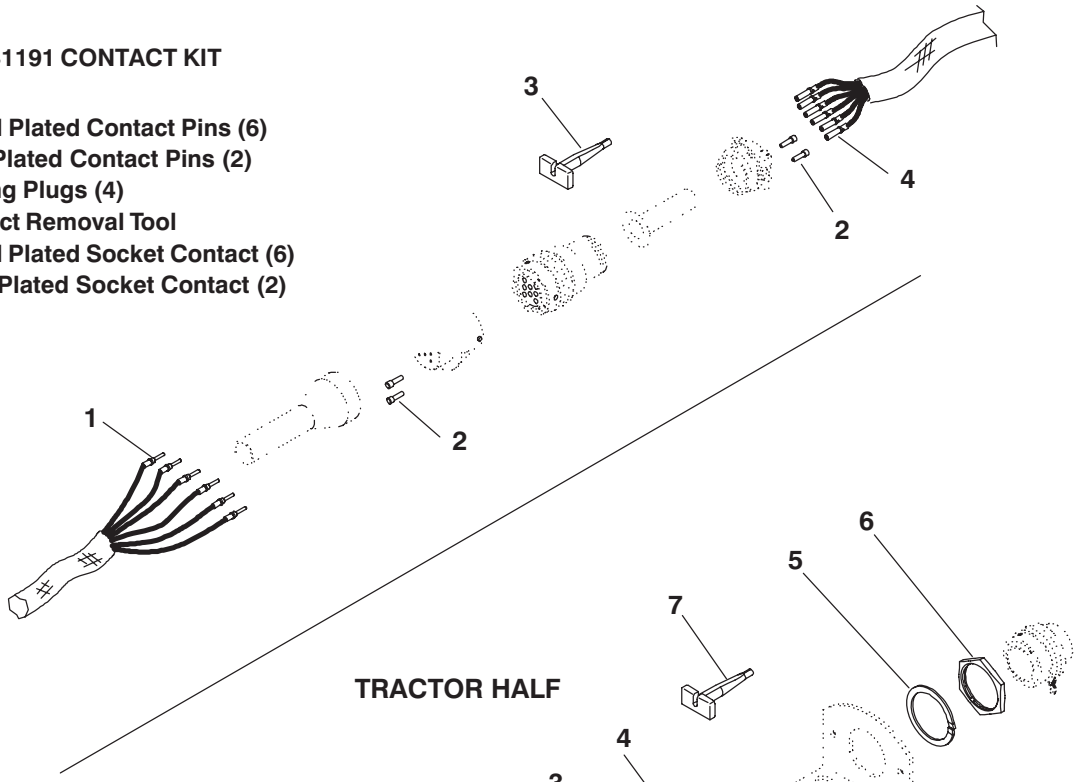

TRACTOR HALF

141192 RECEPTACLE KIT

1-Nickel Plated Contact Pins (4)
Gold Plated Contact Pins (2)
2-Connector Boot
3-Sealing Plugs (2)
4-Receptacle Connector
5-1-1/2″ Lock Washer
6-1-1/2″ Panel Nut
7-Contact Removal Tool

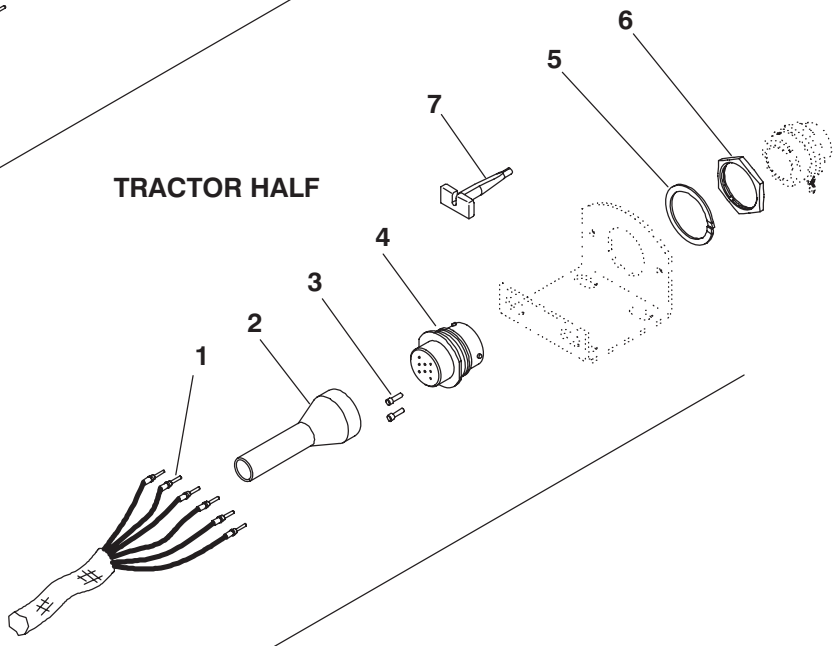

141193 PLUG KIT

1-Nickel Plated Socket Contact (4)
Gold Plated Socket Contact (2)
2-Sealing Plugs (2)
3-Plug Connector
4-Contact Removal Tool

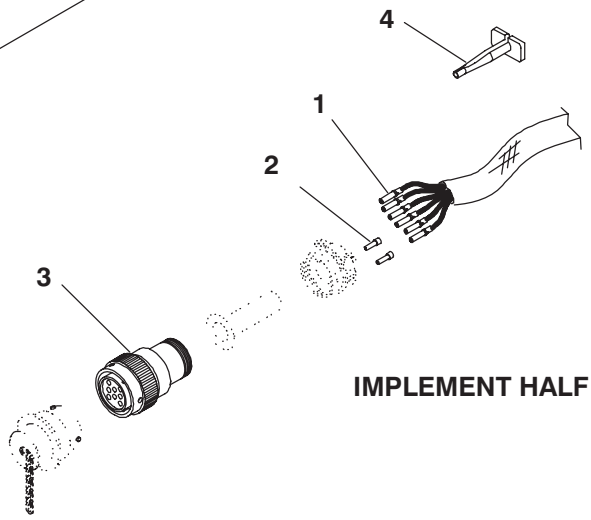

IMPLEMENT HALF

Index

A

Actuator, 87
Automatic Bale Control, 70–78
Axle Assembly, 86

B

Bale Starter, 28–29
Belts, 30–31

C

Center Sheets, 16–17
Control Boxes
  Automatic Twine Wrap, 85
  Manual Twine Wrap, 84

D

Decal Application, 2
Decal Locations, 2–6
  Quick Wrap, 6
Drawbar, 7

F

Frame & Crossmembers, 12–15
Front Frame, 8–9

G

Gearbox Drive, 10–11

H

Hitchjack, 93

I

Idlers, Sprockets & Chains, 32–35
Introduction, 2

O

Options & Accessories
  Audible Alarm Kit, 99
  Bale Ramps, 94
  Chain Oiler, 98
  Crowder Wheel Kit, 96
  Idler Assembly, 99
  Jumper Harness, 99
  Lacing Kit, 97
  Packing Roll Lagging Kit, 97
  Pickup Lift Kit, 95
  Safety Chain, 97
  Shuttle Return Kit, 94
Overrunning Clutch, 92

P

Paint Notice, 2
Pickup
  Frame, Guides & Idler, 50–51
  Idler Pulley, 51
  Left Header, 53
  Lift, 54–55
  Overfill Clutch, 56–57
  Reel, 48–49
  Right Header, 52
  Tine, 48–49

Q

Quick Wrap
  Left Side Assembly, 104–105
  Right Side Assembly, 102–103
  Rollers & Brackets, 100–101
  Shields, Control Box & Harness, 106–110

R

Reservoir, 38–39
Roll Arm
  Left, 26–27
  Right, 22–25
Roller
  Packing, 22–25
  Scraper, 19
Rollers
  Drive, 20–21
  Floor, 18
  Upper, 30–31

S

Service Kits,
  Electrical Connectors, 111
Shear Bolts, 90
Shields & Guards, 62–65
Shuttle Assembly, 40–41

T

Tailgate, 42–43
  Hydraulics, 44–47
TDC
  Cylinder, 91
  Hydraulics, 36–39
Transmission
  1000 RPM, 89
  540 RPM, 88
Transport Lights, 66–67
Twine Boxes, 58–61
Twine Wrap, 68–69
  Automatic, 79–81
  Manual, 82–83

U

Universal Drive, 90

W

Windguard, 7

Part No.	Page No.	Ref. No.	Part No.	Page No.	Ref. No.	Part No.	Page No.	Ref. No.	Part No.	Page No.	Ref. No.
A162	07	17	17H361	25	08	050270	69	07	056937	47	20
B11069	09	31	17H361	27	33	051250	37	50	056937	69	09
R13216	18	15	17H361	33	29	051569	55	21	056997	98	19
B11296	23	59	17H361	41	43	051904	103	87	057179	21	05
B11296	25	59	17H281	55	38	051904	105	87	057179	41	32
B11296	27	44	17H387	83	18	052595	83	02	057179	43	64
B11221	33	01	005620	63	42	053342	37	51	057557	33	58
B11162B	37	02	006989	11	14	053688	51	32	057557	103	104
U10014B	39	01	027003	31	02	053696	69	08	057557	105	104
H487	43	02	027003	41	01	053900	52	02	057617	96	03
U10014B	43	03	027003	43	04	053900	57	02	057617	96	03
H7125	49	01	027003	52	01	054586	63	22	057655	95	02
R13018	55	10	027003	53	01	054586	65	22	057778	84	01
B11162	55	20	040183	69	29	055142	41	02	057779	84	02
U10063	57	01	040775	103	73	055371	92	01	057781	84	03
B11069	59	04	040775	105	73	055372	92	02	057831	39	03
B11069	61	28	041499	18	13	055648	45	63	057864	103	62
H8049	69	05	041499	23	31	055648	47	06	057864	105	62
M12070	69	94	041499	25	31	055648	59	73	057965	21	41
B11069	71	01	041499	27	96	055648	67	06	057980	41	03
B11069	73	01	041499	43	70	055648	75	02	058138	69	76
B11433A	83	01	041881	49	30	055648	77	61	058138	101	03
B11069	83	39	042135	49	41	055648	78	61	058398	97	02
B11162B	83	45	042158	18	04	055648	79	61	058489	21	53
B11162B	96	11	042158	33	28	055648	81	61	058539	57	24
IDLER	99	02	042162	86	15	055648	83	59	058539	83	03
B11335	103	10	042163	86	01	055648	98	14	058807	53	02
B11108B	103	79	042598	39	41	055648	107	03	059052	83	50
H6077	103	102	042826	25	53	055648	109	03	059053	83	51
B11335	105	10	045327	11	82	055648	110	03	059059	84	08
B11108B	105	79	045582	86	22	056080	39	42	059064	84	11
H6077	105	102	045660	33	54	056080	47	18	059075	45	62
H7165	21	10	046001	86	19	056080	95	01	059075	67	07
H7165	41	34	046677	107	01	056081	39	02	059075	71	44
H8354	51	31	046677	109	01	056145	52	03	059075	73	44
H7126	69	56	046754	43	62	056145	57	22	059075	77	44
6H154	103	68	047269	43	05	056227	103	93	059075	78	44
6H154	105	68	047269	75	01	056227	105	93	059075	81	44
3E123	69	04	047272	06	01	056230	11	06	059075	107	67
6H130	43	01	048028	103	74	056230	23	40	059075	109	67
6H130	77	20	048028	105	74	056230	25	40	059299	84	12
3E136	101	36	048459	17	12	056249	49	31	059321	84	04
9H240	37	01	048967	107	66	056287	33	55	059453	37	43
9H300	41	28	048967	109	66	056773	37	30	059566	23	37
17H361	21	42	048995	101	02	056773	109	66	059566	25	37
17H361	23	08	050270	55	24	056937	33	51	059692	19	15
									059721	09	32

Part No.	Page No.	Ref. No.	Part No.	Page No.	Ref. No.	Part No.	Page No.	Ref. No.	Part No.	Page No.	Ref. No.
059721	59	03	064260	49	02	066492	49	05	069255	84	07
059721	61	29	064260	49	42	066492	49	43	069257	84	06
059721	71	02	064260	59	02	066511	52	04	069370	23	04
059721	73	02	064260	61	30	066511	53	903	069370	25	04
059721	83	40	064260	71	72	066524	51	07	069370	25	35
060147	02	01	064260	73	72	066526	51	33	069485	31	14
060148	02	02	064260	83	41	066528	51	34	069531	53	04
060151	02	03	064415	96	15	066531	51	01	069789	43	13
060375	83	52	064479	23	67	066531	55	30	070470	43	14
060375	84		064669	39	60	066532	51	35	070607	83	02
060376	84	05	065240	11	15	066533	51	36	070610	39	43
060469	96	06	065538	63	45	066537	57	03	070612	39	44
060510	02	04	065703	55	31	066540	57	04	070643	41	51
060511	02	05	065703	55	40	066542	57	05	070645	43	14
060971	84	09	065811	83	09	066717	86	02	070648	63	15
060972	84	10	066155	13	21	066765	83	11	070648	65	15
061060	83	07	066155	15	21	066770	103	30	070702	21	61
061062	107	05	066160	41	33	066770	105	30	070730	41	05
061062	109	05	066174	83	10	066777	43	85	070736	23	36
061062	110	05	066183	31	10	066777	45	13	070736	25	36
061102	73	68	066183	43	61	067040	75	03	070749	27	21
061276	93	01	066185	21	39	067040	81	84	070750	43	15
061501	19	08	066221	23	22	067131	02	07	070754	43	87
061508	33	52	066221	25	22	067416	69	12	070757	37	20
061529	37	03	066221	27	60	067491	45	14	070758	37	04
061711	13	21	066226	23	24	067493	02	08	070764	103	97
061711	15	21	066226	25	24	067516	51	02	070764	105	97
061806	27	27	066226	27	56	067847	29	17	070765	37	05
061809	18	12	066226	33	16	067847	59	21	070775	39	45
061832	02	06	066309	43	06	067847	81	43	070777	39	06
061858	103	99	066350	43	07	067847	94	06	070791	29	18
061858	105	99	066351	43	08	067847	103	19	070795	29	19
062255	11	29	066352	43	09	067847	105	19	070796	29	20
062282	63	43	066363	43	10	068034	53	22	070797	29	21
062342	23	28	066369	23	15	068034	103	113	070798	29	22
062342	25	28	066369	43	11	068034	105	113	070804	29	23
062342	27	93	066376	43	12	068071	69	28	070833	43	13
062342	41	45	066377	43	83	068542	103	114	070834	43	10
062342	69	66	066380	43	84	068542	105	114	070835	43	84
062755	23	01	066385	45	12	068633	97		070856	13	33
062755	25	01	066432	47	15	068846	97	03	070856	15	33
062755	27	20	066480	49	03	068847	97	01	070856	59	16
062910	39	21	066487	29	16	068848	97	02	070965	41	35
063586	29	15	066487	49	04	068938	45	16	071048	49	06
063592	78	102	066489	49	33	068938	47	05	071520	13	10
064260	09	34	066490	49	35	069076	97	08	071520	15	10
									071520	37	06

Part No.	Page No.	Ref. No.
071558	39	46
071596	49	12
071601	49	07
071605	49	08
071607	49	45
071608	49	49
071609	49	46
071626	53	05
071627	52	06
071631	53	06
071635	51	51
071637	51	03
071700	63	19
071700	65	19
071700	71	37
071700	73	37
071700	77	01
071700	79	01
071700	81	37
071700	90	06
071700	103	96
071700	105	96
071701	07	15
071701	23	54
071701	25	54
071701	27	14
071701	31	15
071701	33	19
071701	43	16
071701	52	07
071701	55	05
071701	57	16
071701	61	26
071701	63	46
071701	69	19
071701	73	41
071701	77	41
071701	79	41
071703	27	15
071703	29	24
071703	37	40
071703	39	08
071703	41	06
071703	43	17
071703	49	11
071703	51	04
071703	69	91
071703	71	43
071703	73	43
071703	81	07
071703	103	116
071703	105	116
071706	23	66
071706	25	66
071706	27	73
071706	29	01
071706	33	07
071706	37	15
071706	41	07
071706	43	18
071706	55	41
071706	57	15
071706	59	08
071706	94	05
071706	95	03
071739	39	09
071741	39	10
071767	31	01
071768	41	08
071939	49	48
071969	49	49
071970	49	12
072171	37	41
072172	37	42
072186	103	76
072186	105	76
072478	09	20
072554	49	32
072627	96	07
072660	96	12
072641	96	09
072806	98	11
072807	39	04
072918	103	94
072918	105	94
073172	43	89
073234	96	08
073390	97	
073535	77	52
073535	79	52
073686	63	50
073846	51	52
074023	69	15
074027	25	15
074027	33	14
074028	23	14
074028	25	14
074028	27	71
074028	33	02
074091	69	74
074785	91	09
074792	17	47
074793	37	16
074963	19	25
074964	19	26
074964	23	33
074964	25	33
075060	25	02
075413	23	23
075413	25	23
075413	27	61
075497	17	08
075498	17	09
075500	17	01
075501	17	02
075502	13	12
075502	15	12
075505	37	30
075505	37	30
075505	78	51
075622	17	08
075626	17	09
075650	51	05
075651	51	06
075665	98	15
075694	19	01
075829	57	06
076078	67	05
076078	78	103
076078	81	103
076078	107	05
076078	109	05
076078	110	05
076090	103	33
076090	105	33
076122	83	44
076161	103	22
076161	105	22
076568	94	01
076586	86	03
076788	39	11
076846	103	35
076846	105	35
076992	92	03
077095	87	02
077097	87	01
077098	87	05
077526	21	44
077526	41	44
077601	11	08
077717	84	18
077794	23	20
077794	25	20
077836	93	07
077838	93	05
077839	93	08
077955	91	09
078033	41	09
078033	57	14
078060	41	52
078113	97	03
078128	13	13
078128	15	13
078295	83	13
078301	15	40
078834	55	13
079061	33	18
079187	107	50
079187	109	50
079716	86	04
079878	61	11
079878	63	24
079878	65	24
080648	107	45
080648	109	45
080894	97	02
081017	103	86
081017	105	86
081087	107	48
081087	109	48
081374	13	11
081374	15	11
081462	93	02
081463	93	04
082808	83	14

Part No.	Page No.	Ref. No.	Part No.	Page No.	Ref. No.	Part No.	Page No.	Ref. No.	Part No.	Page No.	Ref. No.
084255	13	47	090060	18	05	094914	02	21	111324	103	21
084404	11	31	090061	18	08	094962	02	22	111324	105	21
084404	90	22	090065	18	06	094977	02	23	111330	103	18
084591	88	17	090067	51	08	095130	90	13	111330	105	18
084595	88	15	090088	88	09	095141	90	07	112269	98	09
084595	89	15	090088	89	09	097208	11	30	112286	75	08
084608	13	14	090090	88	14	097208	88	20	112287	73	04
084608	15	14	090090	89	14	097208	89	20	112291	107	14
084622	29	02	090092	88	13	097419	29	27	112291	109	14
084624	29	03	090092	89	13	097859	59	70	112414	73	91
084624	29	26	090667	51	08	097860	09	29	112417	73	92
084624	69	16	090895	90	19	097860	45	06	112423	71	60
084628	101	05	091209	98	01	097938	69	17	112423	73	90
084630	29	04	091210	98	02	097947	69	18	112423	77	60
084630	101	06	091213	98	03	098260	43	24	112423	79	60
084644	43	19	091216	98	16	098409	19	01	112423	81	60
084648	43	20	091219	98	04	098410	19	02	112423	103	120
084650	43	21	091444	02	09	098411	19	06	112423	105	120
084651	43	22	091716	103	84	098413	19	01	112442	86	21
084655	43	23	091716	105	84	098414	19	02	112484	75	04
084682	86	05	091870	86	20	098503	07	05	112485	75	05
084687	13	14	092021	93	03	098534	47	26	112486	75	25
084687	15	14	092303	13	23	098538	29	06	112500	75	06
084712	43	19	092303	15	23	098551	29	07	112501	73	10
084719	43	22	092792	90	20	098553	29	07	112586	103	107
084721	43	23	093020	02	10	098554	29	06	112586	105	107
086925	90	01	093366	02	11	098691	47	25	112599	103	31
086935	90	17	093367	02	12	098898	41	50	112599	105	31
086936	90	16	093373	02	13	098899	41	50	112809	107	16
086938	90	20	093457	02	14	098993	07	08	112809	109	16
087402	45	25	093457	06	02	098996	07	06	112812	71	11
087403	45	25	093458	02	15	098997	07	07	112812	73	11
088809	19	02	093459	02	16	099134	103	15	112831	103	88
088841	07	12	093461	02	17	099134	105	15	112831	105	88
088841	93		093462	02	18	099153	103	17	112832	103	85
088854	94	07	093466	02	19	099153	105	17	112832	105	85
089133	88	05	093653	02	20	099190	103	09	112837	107	10
089133	89	05	094057	37	17	099190	105	09	112837	109	10
089141	88	06	094104	31	30	099197	103	08	112854	107	10
089141	89	06	094104	101	07	099197	105	08	112854	109	10
089831	11	16	094193	39	32	099198	103	03	112959	101	32
089955	87	03	094283	93	06	099198	105	03	112969	101	32
089956	87	06	094804	11	01	099625	13	23	112979	103	71
089957	87	08	094804	88		099625	15	23	112979	105	71
089958	87	04	094891	43	90	111303	101	10	112980	103	69
090057	18	09	094892	43	91	111323	101	11	112980	105	69
									112981	02	24

Part No.	Page No.	Ref. No.	Part No.	Page No.	Ref. No.	Part No.	Page No.	Ref. No.	Part No.	Page No.	Ref. No.
112982	103	70	117960	71	13	118324	23	55	118713	39	48
112982	105	70	117960	73	13	118324	25	55	118790	39	12
112985	103	72	117961	73	14	118325	18	03	118791	39	12
112985	105	72	117969	37	11	118327	18	02	118989	39	07
112988	103	34	117988	107	61	118329	31	19	118992	61	23
112988	105	34	117988	109	61	118330	15	07	119001	41	36
112992	103	100	117989	107	62	118331	15	08	119002	41	37
112992	105	100	117989	109	62	118346	31	18	119003	13	15
112993	103	34	117995	71	63	118361	33	03	119003	15	15
112993	105	34	117995	73	93	118362	33	04	119004	13	15
113140	103	82	117995	77	04	118363	33	05	119004	15	15
113140	105	82	117995	79	04	118364	23	41	119014	61	24
113151	06	04	117995	81	63	118364	25	41	119027	07	16
113154	101	37	117995	99	03	118398	95	04	119031	92	04
113158	101	38	118159	107	17	118473	29	05	119045	92	05
113340	02	25	118159	109	17	118474	29	05	119049	33	27
113368	31	16	118162	103	13	118506	73	17	119050	92	06
113369	31	17	118162	105	13	118511	11	26	119052	19	12
113376	103	23	118163	103	13	118517	103	112	119055	19	24
113376	105	23	118163	105	13	118517	105	112	119057	69	23
113378	103	14	118166	71	16	118522	27	18	119060	63	21
113378	105	14	118166	73	16	118544	33	46	119060	65	21
113379	103	14	118169	71	82	118553	15	41	119062	69	72
113379	105	14	118169	73	96	118557	37	35	119064	13	06
113384	103	26	118169	99	01	118620	09	43	119064	15	06
113384	105	26	118170	83	38	118633	95	05	119065	69	90
113385	103	20	118174	23	07	118635	27	23	119123	73	17
113385	105	20	118174	25	07	118644	23	72	119132	73	21
113390	103	07	118181	13	07	118646	15	41	119133	71	22
113390	105	07	118181	15	07	118658	27	95	119133	73	22
113392	103	07	118182	13	08	118659	101	15	119136	09	11
113392	105	07	118182	15	08	118660	101	15	119137	63	14
113395	31	18	118185	23	42	118662	69	33	119137	65	14
113396	103	06	118185	25	42	118666	61	04	119139	69	31
113396	105	06	118188	19	12	118673	39	48	119153	07	13
113399	103	06	118193	23	39	118689	23	32	119154	07	13
113399	105	06	118193	25	39	118689	25	32	119163	11	13
115666	97	01	118199	25	55	118691	25	30	119164	11	04
117026	107	11	118256	33	08	118692	33	03	119165	11	81
117026	109	11	118259	33	12	118695	23	80	119166	11	83
117218	43	25	118263	18	03	118696	41	30	119168	11	07
117955	103	109	118282	21	51	118697	41	30	119169	11	07
117955	105	109	118300	33	49	118700	41	10	119173	09	26
117958	41	31	118304	33	50	118701	41	10	119174	09	27
117959	71	12	118312	18	02	118708	61	05	119175	69	20
117959	73	12	118323	19	12	118712	41	04	119177	69	30
									119191	73	23

Part No.	Page No.	Ref. No.	Part No.	Page No.	Ref. No.	Part No.	Page No.	Ref. No.	Part No.	Page No.	Ref. No.
119197	55	12	119354	45	64	119451	15	16	119594	55	50
119198	55	06	119355	45	02	119452	13	16	119595	07	02
119199	55	15	119359	103	01	119452	15	16	119596	02	31
119202	55	09	119359	105	01	119453	90	08	119597	09	28
119203	55	02	119360	103	02	119454	90	11	119600	90	08
119204	55	03	119360	105	02	119455	90	14	119609	47	04
119207	55	01	119362	96	04	119456	45	02	119611	47	19
119211	63	12	119363	96	05	119460	67	04	119625	77	69
119211	65	12	119364	69	26	119472	55	17	119626	39	05
119212	63	13	119367	13	30	119473	21	11	119627	57	18
119212	65	13	119367	15	30	119474	21	11	119628	57	18
119215	09	08	119370	63	16	119476	31	31	119629	45	34
119216	55	42	119370	65	16	119477	31	31	119635	69	27
119277	09	11	119371	63	16	119532	67	11	119637	11	19
119279	09	33	119371	65	16	119533	67	12	119640	11	20
119280	55	01	119373	11	32	119549	09	01	119665	67	02
119288	96	02	119373	90	15	119550	17	07	119666	67	03
119289	23	11	119375	13	31	119551	17	06	119866	65	04
119289	25	11	119375	15	31	119552	15	09	119867	65	02
119290	25	12	119376	63	10	119553	02	29	119868	65	04
119291	25	58	119376	65	10	119554	02	30	119869	65	02
119295	23	21	119428	63	09	119555	83	16	119873	99	01
119295	25	21	119428	65	09	119556	75	07	119874	99	03
119295	27	52	119430	63	09	119559	19	06	119875	99	02
119297	25	09	119430	65	09	119560	83	17	119876	57	25
119301	25	13	119432	63	10	119561	02	23	119881	101	34
119302	39	30	119432	65	10	119562	02	23	119883	101	34
119315	73	25	119435	96	01	119564	98	18	119885	69	90
119317	33	06	119436	96	01	119565	98	10	119886	75	25
119318	13	05	119437	37	34	119571	47	07	119886	81	12
119318	15	05	119438	15	09	119573	45	34	119887	69	93
119319	33	15	119439	63	11	119574	45	33	119888	37	36
119327	52	05	119439	65	11	119575	45	33	119889	75	08
119328	53	08	119440	63	05	119576	47	16	119891	71	04
119329	69	21	119440	65	05	119582	73	94	119891	73	04
119333	55	16	119441	09	01	119582	98	17	119891	75	34
119336	09	06	119442	17	07	119584	39	47	119892	88	22
119340	61	25	119443	17	06	119585	90	15	119893	98	05
119343	69	22	119444	67	09	119586	90	22	119894	98	
119344	73	26	119445	37	07	119587	75	09	119896	75	28
119345	73	27	119446	02	26	119588	75	10	119896	81	10
119346	73	28	119447	02	26	119589	90	14	119897	75	27
119348	73	29	119448	02	27	119590	90	11	119897	81	11
119350	103	36	119449	02	28	119591	47	08	119899	75	29
119350	105	36	119451	13	16	119592	47	09	119899	81	09
119352	47	03	119450	02	28	119593	55	49	119900	71	69
									119900	73	97

Part No.	Page No.	Ref. No.
119900	81	69
119903	77	10
119903	79	10
119904	69	79
119905	98	06
119906	98	07
119907	98	08
119909	98	12
119910	98	13
119921	73	98
119922	73	99
119956	75	26
119956	81	16
120470	75	32
120472	75	33
120472	77	06
120472	79	06
120473	71	62
120473	77	05
120473	79	05
120473	81	62
120474	57	25
120484	02	32
120486	23	68
120490	71	66
120490	81	66
120492	71	68
120492	81	68
120496	69	31
120497	69	22
120499	69	30
120501	27	23
120509	69	37
120509	87	
120822	86	16
120825	87	07
120826	95	09
120866	103	16
120866	105	16
120868	13	40
120869	13	46
120871	13	46
120880	37	34
120883	37	07
120902	59	15
120907	59	05
120921	63	51
120924	81	04
120925	81	05
121002	103	89
121002	105	89
122617	02	33
124109	43	26
124110	43	27
124197	101	13
124493	43	52
124680	103	106
124680	105	106
124751	101	16
124982	06	03
125120	101	41
125124	103	25
125124	105	25
125214	69	36
125249	103	108
125249	105	108
125266	107	47
125266	109	47
125267	107	49
125267	109	49
125473	107	21
125473	109	21
125488	107	25
125488	109	25
125499	45	38
125626	43	27
125628	43	26
125634	103	03
125634	105	03
125637	101	13
125638	101	11
125639	101	10
125644	101	05
125646	103	08
125646	105	08
125647	107	11
125647	109	11
125664	101	16
125669	107	22
125669	109	22
125672	107	24
125672	109	24
125673	107	21
125673	109	21
125905	103	106
125905	105	106
125918	101	42
125921	43	28
125922	43	29
125926	103	05
125926	105	05
125947	107	07
125947	109	07
125948	43	28
125949	43	29
125950	103	05
125950	105	05
126212	107	22
126212	109	22
126214	107	24
126214	109	24
126227	43	52
126228	43	24
126236	69	37
126236	87	
126236	103	105
126236	105	105
126248	87	07
126342	11	22
126530	91	07
126641	88	07
126641	89	07
126663	39	49
126664	37	18
126665	37	07
126666	91	02
126735	93	04
126739	86	21
126763	91	01
126800	41	24
126803	41	23
126804	41	24
126823	27	38
126826	27	35
126829	11	01
126829	89	
126830	88	01
126830	89	01
126831	88	04
126831	89	04
126834	88	10
126834	89	10
126835	88	11
126835	89	11
126836	88	18
126836	89	18
126837	88	21
126837	89	21
126839	88	02
126840	88	03
126841	88	08
126842	88	16
126843	89	02
126844	89	03
126845	89	08
126845	95	08
126846	89	16
126847	89	17
126910	91	03
126911	91	04
126912	91	05
126914	91	08
126918	91	11
126919	91	03
126920	91	04
127048	21	18
127049	21	18
127113	41	08
127114	31	01
127114	43	09
127115	37	08
127115	91	
127117	37	08
127117	91	
127133	103	77
127133	105	77
127189	39	50
127797	23	73
127797	25	73
127797	33	60
127938	75	36
127938	81	14
129506	33	59
141047	59	01
141048	59	10

Part No.	Page No.	Ref. No.	Part No.	Page No.	Ref. No.	Part No.	Page No.	Ref. No.	Part No.	Page No.	Ref. No.
141049	23	76	141495	27	95	143198	85	09	520085	43	31
141049	27	76	141496	23	30	143199	85	10	520085	52	24
141070	37	11	141497	47	30	143200	85	11	520085	53	23
141070	81	30	141498	47	29	143470	07	12	520090	21	17
141070	94	09	141499	63	53	143470	93		520090	43	63
141071	71	59	141500	23	55	143938	81	71	520093	18	18
141071	81	59	141506	29	05	144451	90	21	520093	21	19
141072	71	58	141507	63	52	144884	55	32	520093	43	32
141072	81	58	141508	63	53	145216	02	08	520098	18	16
141074	71	14	141509	63	41	145235	43	72	520099	11	11
141077	71	78	141517	13	07	145262	23	09	520139	43	96
141077	81	100	141518	13	08	145577	23	13	520158	21	40
141077	94	05	141519	59	20	145819	11	07	520175	49	34
141080	81	85	141521	71	10	145820	11	07	520201	86	06
141082	71	81	141521	73	10	153344	11	29	570002	23	03
141082	81	99	141523	13	09	153357	29	02	570002	25	03
141082	94	03	141524	13	09	153439	02	34	570002	27	97
141083	59	19	141525	71	76	155647	81	71	570002	55	25
141192	85	04	141525	81	97	155647	85		570002	92	07
141229	71	17	141525	94	10	155650	85	12	570003	18	14
141229	81	17	141526	71	79	156411	94		570004	23	34
141229	94	11	141526	81	101	156575	09	01	570004	25	34
141460	99	01	141526	94	04	156988	09	01	570004	27	98
141462	09	28	141530	63	02	158044	98	20	570005	43	86
141465	71	05	141531	63	04	160244	37	49	570009	19	27
141465	73	05	141532	99		500037	105	04	570009	43	33
141465	75	35	141549	11	01	510100	90	12	570009	51	38
141465	78	05	141549	88		510114	90	10	570009	69	75
141465	88	23	141550	11	01	510215	90	23	570014	23	81
141465	89	23	141550	89		520007	55	18	570014	43	34
141471	39	31	141551	88	12	520054	86	18	570016	91	10
141472	39	31	141551	89	12	520063	103	11	570019	11	84
141474	88	01	141645	11	19	520063	105	11	570019	37	09
141474	89	01	141710	71	25	520064	23	74	570019	43	71
141475	27	38	141710	83	38	520064	96	10	570019	45	66
141476	27	35	141779	90	18	520065	31	03	570019	69	39
141477	23	58	142009	09	01	520065	41	11	570019	90	02
141478	85	01	142010	09	01	520065	43	30	570023	18	17
141479	85	02	142895	49	09	520065	52	08	570023	23	02
141480	85	03	142459	52	06	520065	53	09	580049	95	06
141481	85	06	142460	52	20	520067	23	57	650172	97	09
141482	85	07	142463	53	06	520067	25	57	650195	103	65
141490	63	02	142464	53	23	520084	103	12	650195	105	65
141491	63	04	142963	94		520084	105	12	650197	55	08
141492	47	03	142965	97		520085	31	04	650197	101	18
141493	02	29	143197	85	08	520085	41	12	650199	103	111
									650199	105	111

Part No.	Page No.	Ref. No.
650201	73	45
650204	21	54
650213	51	14
650213	103	91
650213	105	91
650215	11	05
650315	71	50
650315	73	50
650315	81	50
650370	43	92
650394	75	11
650419	65	17
650419	71	35
650419	73	35
650426	71	57
650426	81	57
650448	43	73
650448	75	12
650448	83	53
650453	29	08
650453	29	28
650453	41	25
650453	53	10
650453	55	37
650453	69	10
650454	69	06
650484	103	54
650484	105	54
650486	17	03
650486	23	56
650486	25	56
650486	27	25
650486	37	46
650486	43	35
650486	47	01
650486	52	09
650486	61	12
650486	63	25
650486	65	25
650486	69	40
650486	71	34
650486	73	34
650486	81	34
650486	103	80
650486	105	80
650487	19	03
650487	27	43
650487	41	13
650487	43	36
650487	57	27
650487	61	20
650487	63	44
650487	77	03
650487	79	03
650487	83	54
650487	103	45
650487	105	45
650488	13	32
650488	15	32
650488	49	15
650488	52	10
650488	53	11
650488	83	21
650488	103	61
650488	103	75
650488	105	61
650488	105	75
650490	09	02
650490	13	17
650490	15	17
650490	15	42
650490	17	32
650490	19	10
650490	21	22
650490	23	10
650490	25	10
650490	27	37
650490	29	29
650490	33	20
650490	37	31
650490	41	38
650490	43	37
650490	45	07
650490	51	15
650490	55	43
650490	59	18
650490	61	18
650490	71	42
650490	73	42
650490	81	42
650490	94	08
650490	101	19
650490	103	41
650490	105	41
650490	107	26
650490	109	26
650491	13	18
650491	15	18
650491	29	36
650491	39	13
650491	69	87
650491	71	33
650491	73	33
650491	107	52
650491	109	52
650492	39	14
650492	43	38
650494	23	26
650494	25	26
650494	27	59
650494	29	09
650494	77	78
650494	79	78
650494	103	115
650494	105	115
650495	11	02
650495	11	09
650495	13	02
650495	15	02
650495	23	44
650495	25	44
650495	33	21
650495	41	14
650495	53	12
650495	55	48
650495	59	06
650495	61	02
650495	94	02
650495	101	21
650495	103	55
650495	105	55
650496	94	08
650502	103	98
650502	105	98
650503	31	20
650513	29	30
650513	51	16
650513	55	07
650528	37	44
650528	49	16
650528	55	14
650533	19	11
650533	77	75
650533	103	83
650533	105	83
650535	39	15
650535	43	82
650542	51	40
650545	33	09
650545	43	39
650545	49	51
650545	52	11
650545	57	28
650545	73	79
650546	103	90
650546	105	90
650548	75	13
650548	81	89
650549	75	14
650549	81	90
650550	75	15
650550	81	91
650551	43	56
650551	63	48
650553	75	31
650553	81	13
650559	55	04
650568	49	17
650568	57	07
650568	69	14
650569	09	40
650569	13	19
650569	15	19
650569	18	07
650569	43	40
650569	69	42
650569	95	07
650573	19	17
650573	45	67
650573	71	80
650573	73	80
650573	101	22
650573	103	103
650573	105	103
650573	107	63

Part No.	Page No.	Ref. No.	Part No.	Page No.	Ref. No.	Part No.	Page No.	Ref. No.	Part No.	Page No.	Ref. No.
650573	109	63	650704	27	45	650835	71	38	651212	77	11
650577	31	21	650704	31	05	650835	73	38	651212	79	11
650577	57	26	650704	39	61	650835	77	09	651212	81	53
650579	18	10	650704	41	15	650835	79	09	651328	71	55
650579	51	41	650704	43	43	650835	81	38	651328	77	12
650584	107	29	650704	52	13	650835	99	04	651328	79	12
650584	109	29	650704	53	14	650835	103	95	651328	81	55
650590	63	49	650704	69	43	650835	105	95	651346	71	54
650601	33	22	650704	101	33	650844	07	03	651346	81	54
650610	13	28	650704	103	63	650848	71	56	653005	43	75
650610	15	28	650704	105	63	650848	81	56	653005	59	14
650618	107	53	650706	63	17	650860	23	48	653005	63	32
650618	109	53	650710	07	01	650860	25	48	653005	65	32
650627	61	13	650710	37	21	650860	43	45	653005	67	14
650627	63	26	650725	07	18	650878	103	110	653005	75	16
650627	65	26	650733	47	31	650878	105	110	653005	83	55
650644	101	35	650740	69	11	650913	45	51	653005	84	17
650647	09	21	650744	23	18	650914	43	93	653007	17	39
650647	51	42	650744	25	18	650943	63	31	653007	19	19
650687	27	42	650748	59	11	650943	65	31	653007	27	49
650687	43	42	650748	63	40	650943	84	13	653007	33	13
650687	52	12	650748	67	15	650949	43	46	653007	37	48
650687	53	13	650773	17	11	650949	52	14	653007	39	18
650687	63	03	650773	21	16	650949	53	15	653007	41	16
650687	65	03	650774	25	16	650949	107	32	653007	43	47
650687	69	78	650781	63	01	650949	109	32	653007	45	55
650687	71	73	650781	65	01	650954	51	18	653007	47	27
650687	73	73	650784	43	44	650958	71	67	653007	52	15
650687	77	73	650786	13	22	650958	81	67	653007	53	16
650687	78	73	650786	15	22	650965	49	18	653007	57	29
650687	83	42	650786	43	45	650985	09	07	653007	59	72
650687	103	52	650786	101	23	650985	63	34	653007	61	14
650687	105	52	650790	51	17	650985	65	34	653007	63	06
650687	107	28	650791	23	16	650985	78	96	653007	65	06
650687	109	28	650791	33	17	650985	103	92	653007	65	27
650694	33	42	650810	103	46	650985	105	92	653007	69	47
650695	57	08	650810	105	46	650987	09	09	653007	71	15
650695	97	01	650812	61	15	651022	39	17	653007	73	15
650702	84	15	650812	63	28	651148	23	17	653007	77	15
650704	13	20	650812	65	28	651157	71	64	653007	78	15
650704	15	20	650813	61	17	651157	77	02	653007	81	15
650704	17	37	650813	63	30	651157	79	02	653007	83	27
650704	19	18	650813	65	30	651157	81	64	653007	101	24
650704	21	26	650818	29	31	651159	103	78	653007	103	49
650704	23	49	650833	39	24	651159	105	78	653007	105	49
650704	25	49	650834	27	70	651212	71	53	653007	107	34
									653007	109	34

Part No.	Page No.	Ref. No.	Part No.	Page No.	Ref. No.	Part No.	Page No.	Ref. No.	Part No.	Page No.	Ref. No.
653010	09	03	653018	73	40	654004	19	04	654006	109	36
653010	13	25	653018	81	40	654004	29	32	654009	09	42
653010	15	25	653018	94	06	654004	33	10	654009	13	04
653010	15	45	653018	94	01	654004	43	58	654009	15	04
653010	17	40	653018	91	12	654004	47	17	654009	23	25
653010	19	20	653018	101	26	654004	52	17	654009	25	25
653010	21	27	653018	103	56	654004	53	18	654009	27	55
653010	23	50	653018	105	56	654004	57	10	654009	29	10
653010	25	50	653019	69	55	654004	61	10	654009	33	24
653010	27	50	653021	07	10	654004	63	07	654009	41	26
653010	31	06	653021	09	23	654004	65	07	654009	43	49
653010	37	32	653021	13	24	654004	65	20	654009	53	19
653010	39	19	653021	15	24	654004	69	77	654009	55	35
653010	39	62	653021	23	69	654004	71	18	654009	59	07
653010	41	39	653021	33	44	654004	73	18	654009	69	51
653010	43	48	653021	37	24	654004	77	18	654009	101	28
653010	45	69	653021	51	44	654004	79	18	654009	101	43
653010	49	19	653021	57	17	654004	103	60	654009	103	59
653010	51	19	653021	97	04	654004	105	60	654009	105	59
653010	52	16	653026	41	18	654004	107	35	654012	07	09
653010	53	17	653026	97	05	654004	109	35	654012	23	70
653010	55	22	653034	61	27	654006	09	04	654012	37	22
653010	61	21	653044	57	09	654006	13	26	654012	51	46
653010	69	48	653044	91	06	654006	15	26	654012	57	11
653010	71	49	653045	69	50	654006	17	43	654014	41	22
653010	77	49	653102	86	07	654006	21	32	654014	55	19
653010	83	28	653119	96	13	654006	23	51	654014	97	07
653010	101	25	654002	23	60	654006	25	51	654016	43	95
653010	103	43	654002	25	60	654006	27	54	654016	45	59
653010	105	43	654002	27	48	654006	29	33	654022	43	74
653018	09	41	654002	59	12	654006	39	63	654022	51	47
653018	11	10	654002	63	18	654006	41	20	654022	59	13
653018	13	01	654002	65	18	654006	51	20	654022	63	33
653018	13	43	654002	67	17	654006	59	17	654022	65	33
653018	15	01	654002	71	36	654006	61	19	654022	67	16
653018	15	43	654002	73	36	654006	63	47	654022	75	18
653018	23	05	654002	75	17	654006	69	88	654022	83	57
653018	25	05	654002	77	07	654006	71	77	654022	84	16
653018	27	77	654002	79	07	654006	77	46	654024	11	28
653018	33	23	654002	81	36	654006	81	98	654024	17	45
653018	41	17	654002	84	14	654006	83	30	654024	19	05
653018	41	40	654002	103	81	654006	94	07	654024	27	57
653018	55	34	654002	105	81	654006	101	27	654024	33	11
653018	61	01	654004	07	14	654006	103	64	654024	37	47
653018	69	49	654004	09	10	654006	105	64	654024	39	20
653018	71	40	654004	11	27	654006	107	36	654024	41	21
									654024	43	50

RB1475/1875 - NUMERICAL INDEX

Part No.	Page No.	Ref. No.	Part No.	Page No.	Ref. No.	Part No.	Page No.	Ref. No.	Part No.	Page No.	Ref. No.
654024	45	05	654026	27	58	654030	27	75	655010	86	08
654024	47	02	654026	29	35	654030	29	11	655018	96	14
654024	52	18	654026	31	07	654030	31	22	655020	33	41
654024	53	20	654026	33	25	654030	33	26	655020	51	50
654024	57	31	654026	37	33	654030	37	10	655022	45	61
654024	59	23	654026	39	64	654030	41	27	655022	55	11
654024	61	16	654026	41	42	654030	55	36	655539	21	52
654024	63	08	654026	43	51	654030	57	12	656001	11	25
654024	65	08	654026	45	68	654030	61	03	656001	88	19
654024	67	01	654026	49	20	654030	69	54	660061	11	17
654024	69	52	654026	51	21	654030	77	77	660062	11	18
654024	71	08	654026	52	19	654030	79	77	900084	90	07
654024	73	08	654026	53	21	654030	94	04	010–10103	33	56
654024	77	08	654026	55	23	654030	101	31	180–17243	103	32
654024	78	08	654026	61	22	654030	103	58	180–17243	105	32
654024	81	08	654026	69	53	654030	105	58	210–19531	07	04
654024	83	32	654026	71	32	654032	07	11	340–10351	69	02
654024	101	29	654026	73	32	654032	09	30	350–32366	69	03
654024	103	47	654026	77	32	654032	13	29	370–10269	33	57
654024	105	47	654026	83	33	654032	15	29	380–13297	71	65
654024	107	38	654026	101	30	654032	33	43	380–13297	73	95
654024	109	38	654026	103	44	654032	37	23	380–13297	81	65
654026	09	05	654026	105	44	654032	51	49	385–10121	33	53
654026	13	27	654026	107	39	654032	57	13	400–32417	11	12
654026	15	27	654026	109	39	654032	97	03	400–32443	103	38
654026	15	44	654030	09	44	654034	97	06	400–32443	105	38
654026	17	46	654030	11	03	654044	75	19	400–28850	25	17
654026	18	11	654030	13	03	654049	63	54	400–28850	27	86
654026	19	07	654030	15	03	655001	107	41	420–19509	59	09
654026	21	35	654030	18	01	655001	109	41	420–19509	63	23
654026	23	06	654030	23	19	655006	33	45	420–19509	65	23
654026	25	06	654030	25	19						

TORQUE SPECIFICATIONS

NOTE: *Use these torque values when tightening **GEHL** hardware (excluding: Locknuts and Self–tapping, Thread Forming and Sheet Metal Screws) unless specified otherwise.*

All torque values are in Lb-Ft except those marked with an * which are Lb-In
(For metric torque value Nm, multiply Lb-Ft value by 1.355 or Lb-In value by 0.113)

Unified National Thread	Grade 2		Grade 5		Grade 8	
	Dry	Lubed	Dry	Lubed	Dry	Lubed
8-32	19*	14*	30*	22*	41*	31*
8-36	20*	15*	31*	23*	43*	32*
10-24	27*	21*	43*	32*	60*	45*
10-32	31*	23*	49*	36*	68*	51*
1/4-20	66*	50*	9	75*	12	9
1/4-28	76*	56*	10	86*	14	10
5/16-18	11	9	17	13	25	18
5/16-24	12		19	14		20
3/8-16	20	15	30	23	45	35
3/8-24	23	17	35	25	50	
7/16-14	32	24	50	35	70	55
7/16-20	36	27	55	40	80	60
1/2-13	50	35	75	55	110	80
1/2-20	55	40	90	65	120	90
9/16-12	70	55	110	80	150	110
9/16-18	80	60	120	90	170	130
5/8-11	100	75	150	110	220	170
5/8-18	110	85	180	130	240	180
3/4-10	175	130	260	200	380	280
3/4-16	200	150	300	220	420	320
7/8-9	170	125	430	320	600	460
7/8-14	180	140	470	360	660	500
1-8	250	190	640	480	900	680
1-14	270	210	710	530	1000	740
Metric Course Thread	**Grade 8.8** (8.8)		**Grade 10.9** (10.9)		**Grade 12.9** (12.9)	
	Dry	**Lubed**	**Dry**	**Lubed**	**Dry**	**Lubed**
M6-1	8	6	11	8	13.5	10
M8-1.25	19	14	27	20	32.5	24
M10-1.5	37.5	28	53	39	64	47
M12-1.75	65	48	91.5	67.5	111.5	82
M14-2	103.5	76.5	145.5	108	176.5	131
M16-2	158.5	117.5	223.5	165.5	271	200

Gehl Company 143 Water Street, P.O. Box 179, West Bend, WI 53095-0179, U.S.A.

908173/AP1100
©2000 GEHL Company, All Rights Reserved
Printed in U.S.A.